AX0P3–01

REASSEMBLY

NOTICE:

- **The automatic transaxle is composed of highly precision–finished parts, necessitating careful inspection before reassembly because even a small nick could cause fluid leakage or affect the performance. The instructions here are organized so that you work on only one component group at a time. This will help avoid confusion from similar–looking parts of different sub–assemblies being on your workbench at the same time. The component groups are inspected and repaired from the converter housing side. As much as possible, complete the inspection, repair and reassembly before proceeding to the next component group. If a defect is found in a certain component group during reassembly, inspect and repair this group immediately. If a component group cannot be assembled because parts are being ordered, be sure to keep all parts of the group in a separate container while proceeding with disassembly, inspection, repair and reassembly of other component groups.**
  Recommended ATF: TYPE T–IV or equivalent
- **All disassembled parts should be washed clean and any fluid passages and holes should be blown through with compressed air.**
- **Dry all parts with compressed air–never use shop rags.**
- **When using compressed air, always aim away from yourself to prevent accidentally spraying ATF or kerosene on your face.**
- **The recommended automatic transaxle fluid or kerosene should be used for cleaning.**
- **After cleaning, the parts should be arranged in the correct order for efficient inspection, repairs, and reassembly.**
- **When disassembling a valve body, be sure to match each valve together with the corresponding spring.**
- **New discs for the brakes and clutches that are to be used for replacement must be soaked in ATF for at least 15 minutes before reassembly.**
- **All oil seal rings, clutch discs, clutch plates, rotating parts, and sliding surfaces should be coated with ATF prior to reassembly.**
- **All gaskets and rubber O–rings should be replaced.**
- **Do not apply adhesive cements to gaskets and similar parts.**
- **Make sure that the ends of a snap ring are not aligned with one of the cutouts and are installed in the groove correctly.**
- **If a worn bushing is to be replaced, the sub–assembly containing the bushing must also be replaced.**
- **Check thrust bearings and races for wear or damage. Replace if necessary.**
- **Use petroleum jelly to keep parts in place.**
- **When working with FIPG material, you must observe the following.**
  Using a razor blade and a gasket scraper, remove all the old packing (FIPG) material from the gasket surface.
  Thoroughly clean all components to remove all the loose material.
  Clean both sealing surfaces with a non–residue solvent.
  Parts must be reassembled within 10 minutes of application. Otherwise, the packing (FIPG) material must be removed and reapplied.

BEARING AND RACES INSTALLATION POSITION AND DIRECTION

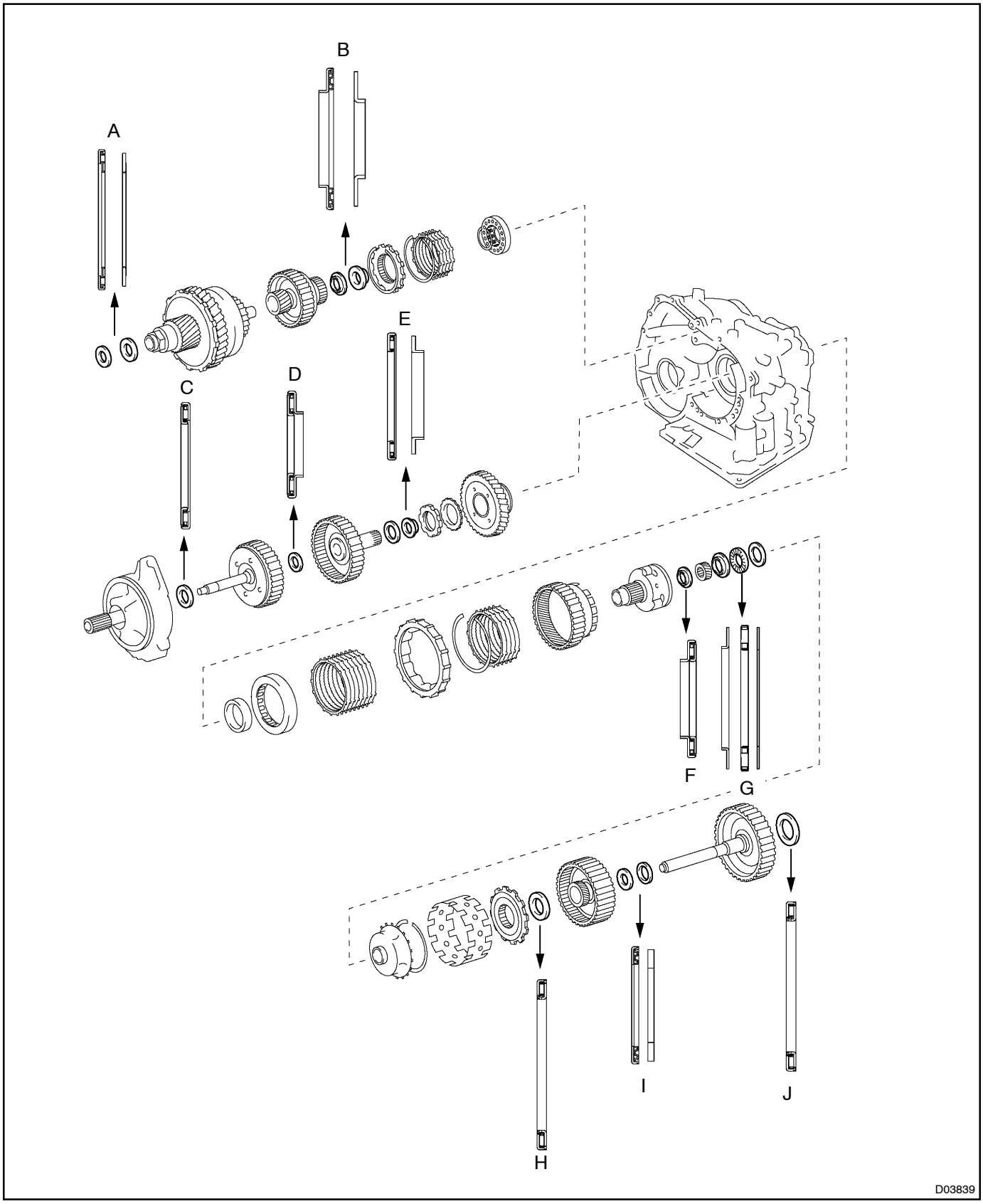

Mark	Front Race Diameter Inside / Outside mm (in.)	Thrust Bearing Diameter Inside / Outside mm (in.)	Rear Race Diameter Inside / Outside mm (in.)
A	–	57.2 (2.252) / 84.96 (3.3449)	56.4 (2.220) / 83.0 (3.268)
B	–	37.73 (1.4854) / 58.0 (2.283)	29.9 (1.177) / 55.5 (2.185)
C	–	33.85 (1.3327) / 52.2 (2.055)	–
D	–	23.5 (0.925) / 44.0 (1.732)	–
E	–	36.3 (1.429) / 52.2 (2.055)	34.5 (1.358) / 48.5 (1.909)
F	–	34.6 (1.362) / 48.5 (1.963)	–
G	40.3 (1.587) / 58.0 (2.283)	38.6 (1.520) / 60.0 (2.362)	38.6 (1.520) / 58.0 (2.283)
H	–	53.6 (2.110) / 69.6 (2.740)	–
I	–	33.7 (1.327) / 48.2 (1.898)	30.3 (1.193) / 46.0 (1.811)
J	–	53.6 (2.110) / 70.18 (2.763) or 69.6 (2.740)	–

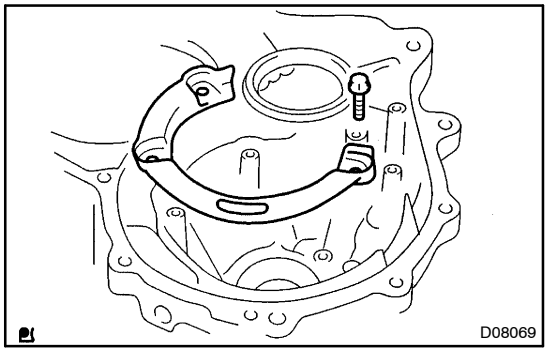

1. INSTALL OIL SEPARATOR

Install the oil separator with the 3 bolts to the transaxle housing.

Torque: 9.8 N·m (100 kgf·cm, 7 ft·lbf)

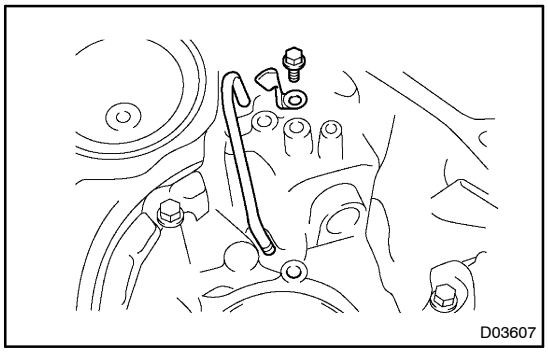

2. INSTALL APPLY PIPE

(a) Install the apply pipe, and clamp with the bolt to the transaxle case.

Torque: 9.8 N·m (100 kgf·cm, 7 ft·lbf)

NOTICE:

Make sure to insert the pipe to the stopper.

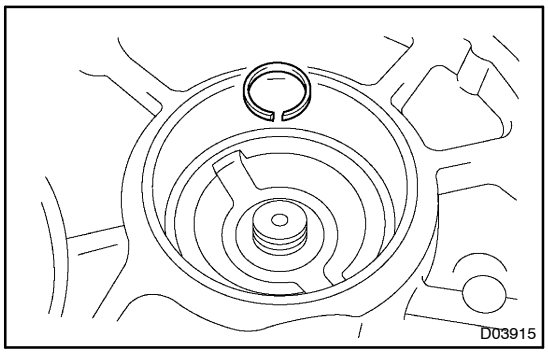

3. INSTALL U/D CYLINDRICAL ROLLER BEARING

(a) Install the oil seal ring to the transaxle housing.

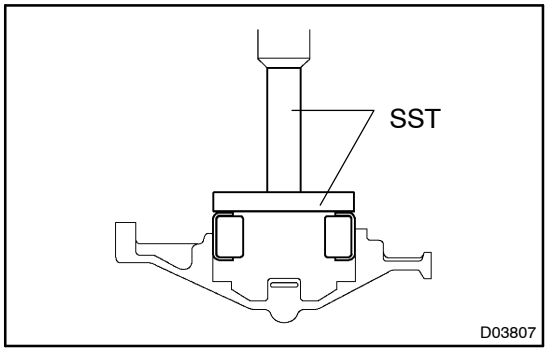

(b) Using SST and a press, install the U/D cylindrical roller bearing.

SST 09950–60020, (09951–00810), 09950–70010, (09951–07100)

NOTICE:

Do not apply excessive pressure to it.

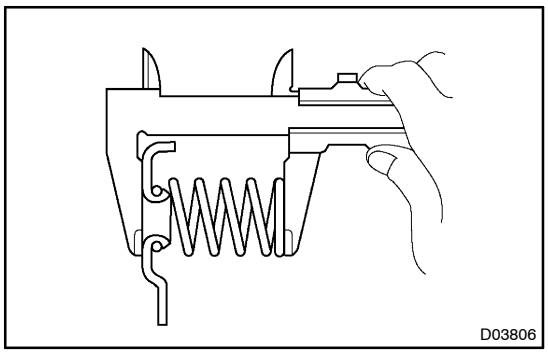

4. CHECK 2ND BRAKE PISTON RETURN SPRING

Using vernier calipers, measure the free length of the spring together with the spring seat.

Standard free length: 16.61mm (0.6539 in.)

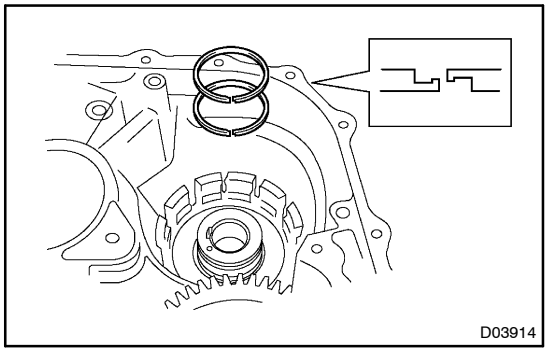

5. INSTALL U/D BRAKE

(a) Install the 2 oil seal rings to the transaxle case.

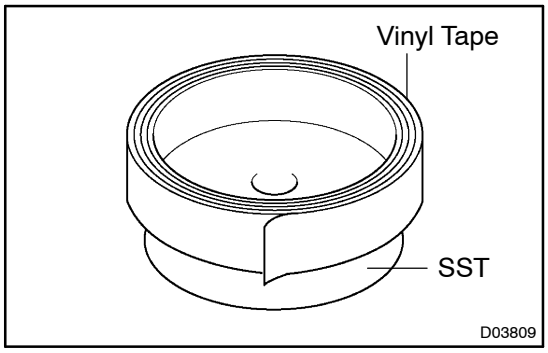

(b) Wind a vinyl tape around SST at the place 4.0 mm (0.157 in.) above from the bottom end until the thickness of the wound tape is about 5.0 mm (0.197 in.).
SST 09950–60010 (09951–00320)

NOTICE:
Clean SST to remove deposited oil, before winding a vinyl tape.

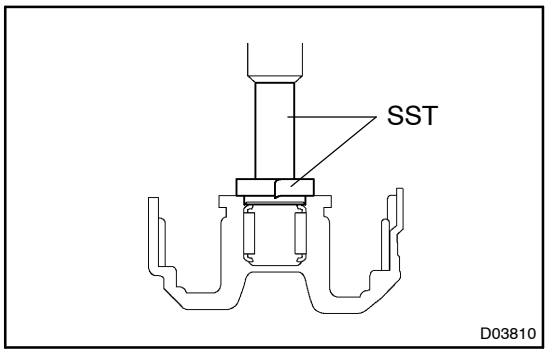

(c) Using SST and a press, install the needle–roller bearing to the transaxle case.
SST 09950–60010, (09951–00320), 09950–70010 (09951–07100)

NOTICE:
When the wound vinyl tape contacts the transaxle case, stop press–fitting.

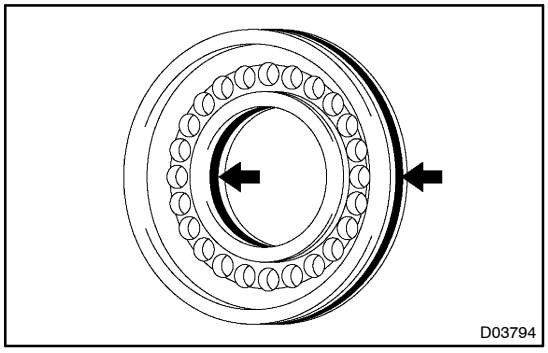

(d) Coat 2 new O–rings with ATF, install them to the U/D brake piston.

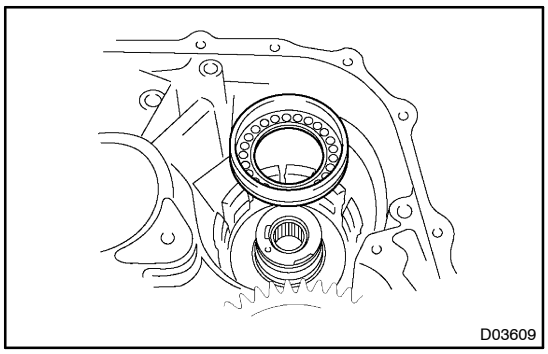

(e) Install the U/D brake piston to the transaxle case.

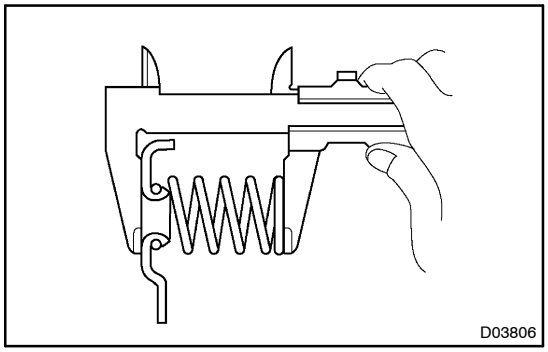

(f) Using vernier calipers, measure the free length of the spring together with the spring seat.
Standard free length: 13.24 mm (0.5212 in.)

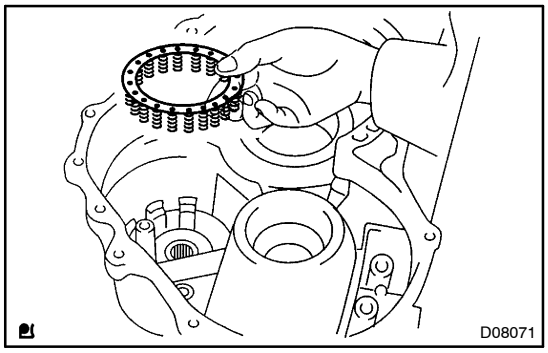

(g) Install the return spring.

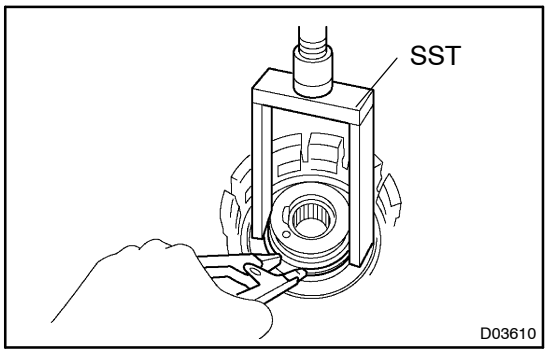

(h) Using SST, a snap ring expander and a press, install the piston return spring and snap ring to the transaxle case.
SST 09387–00020

NOTICE:
- **Press–fit the bearing race RH until it contacts the snap ring.**
- **Do not apply excessive pressure to it.**

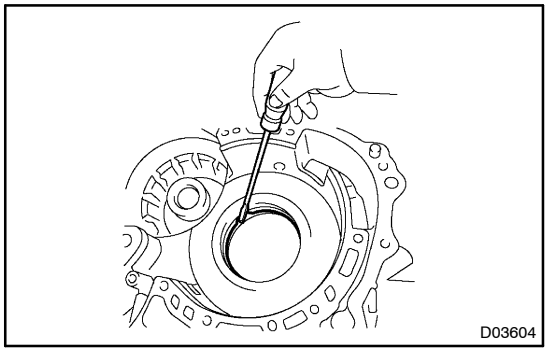

6. INSTALL COUNTER DRIVE GEAR

(a) Using a screwdriver, install the snap ring to the transaxle case.

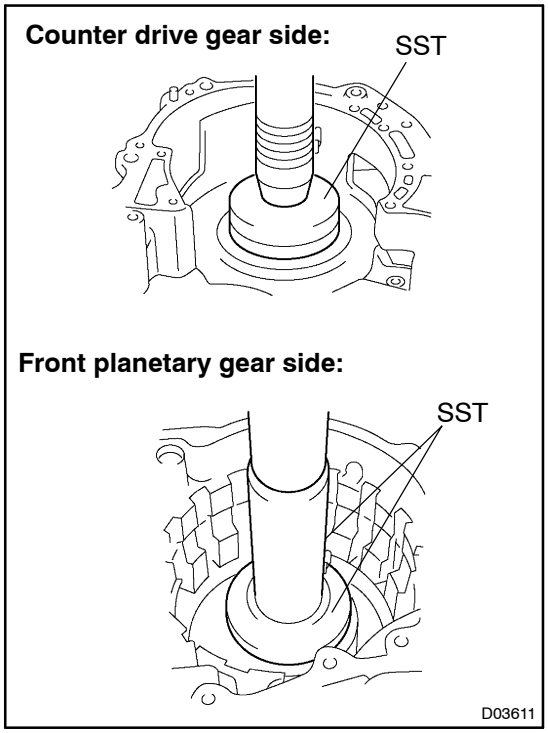

(b) Using SST and a press, install the 2 bearing outer races to the transaxle case.
SST 09950–60020 (09951–00890), 09950–70010 (09951–07150)

NOTICE:
- **Press–fit the bearing race until it contacts the snap ring.**
- **Do not apply excessive pressure to it.**

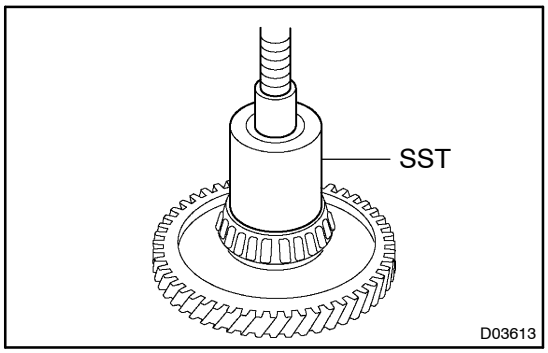

(c) Using SST and a press, install the tapered roller bearing to the counter drive gear.
SST 09649–17010

NOTICE:
- **Press–fit the bearing inner race until it contacts the counter drive gear.**
- **Do not apply excessive pressure to it.**

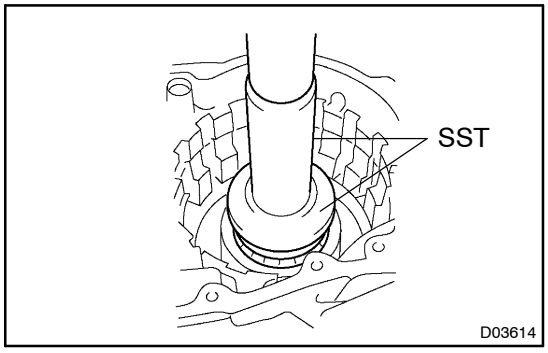

(d) Using SST and a press, install the counter drive gear and bearing to the transaxle case.
SST 09950–60010 (09951–00890), 09950–70010 (09951–07150)

NOTICE:
Do not apply excessive pressure to it.

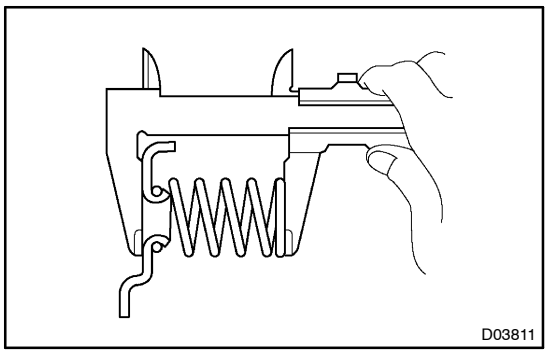

7. CHECK 1ST & REVERSE BRAKE PISTON RETURN SPRING

Using vernier calipers, measure the free length of the spring together with the spring seat.

Standard free length: 17.61 mm (0.6933 in.)

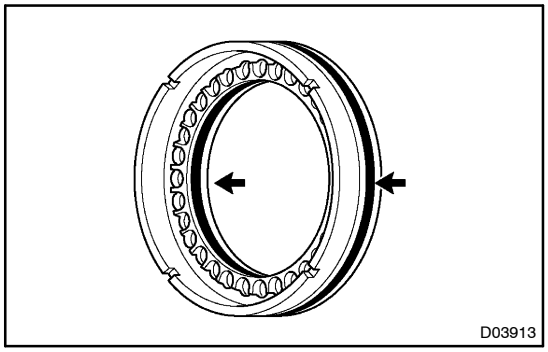

8. INSTALL 1ST & REVERSE BRAKE PISTON

(a) Coat 2 new O–rings with ATF.

(b) Install the 2 O–rings to the 1st & reverse brake piston.

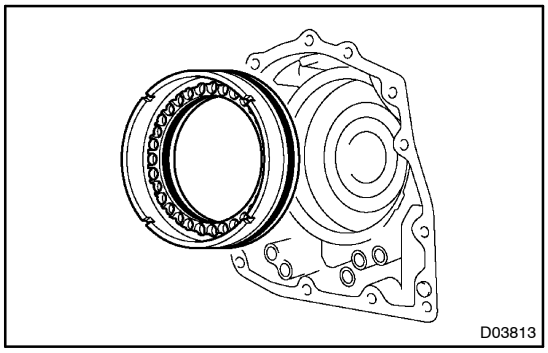

(c) Coat a 1st & reverse brake piston with ATF, install the 1st & reverse brake piston to the transaxle case.

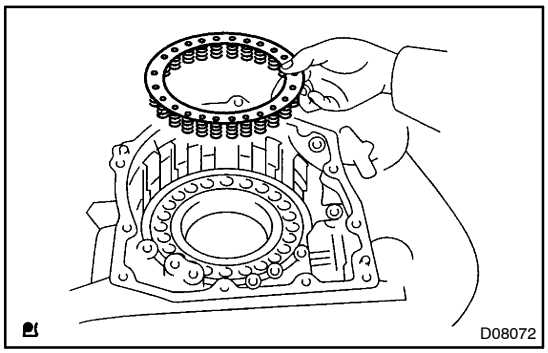

(d) Install the return spring.

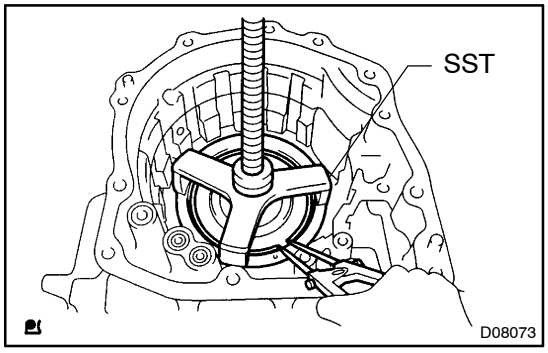

(e) Using SST, a press, and snap ring pliers, install the piston return spring and snap ring to the transaxle case.
SST 09387–00070

NOTICE:

- **Stop the press when the spring sheet is lowered to the place 1 – 2 mm (0.039 – 0.078 in.) from the snap ring groove, preventing the spring sheet from deforming.**
- **Do not expand the snap ring excessively.**

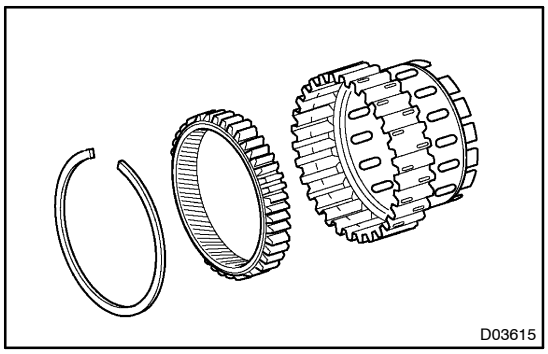

9. INSTALL FRONT PLANETARY GEAR ASSEMBLY

(a) Using a screwdriver, install the front planetary ring gear and the snap ring to the brake hub.

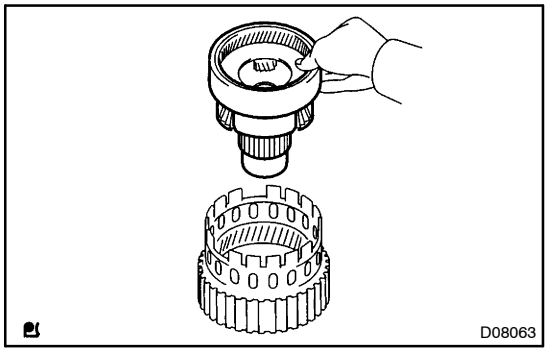

10. INSTALL FRONT PLANETARY GEAR

(a) Install the front planetary gear to the brake hub.

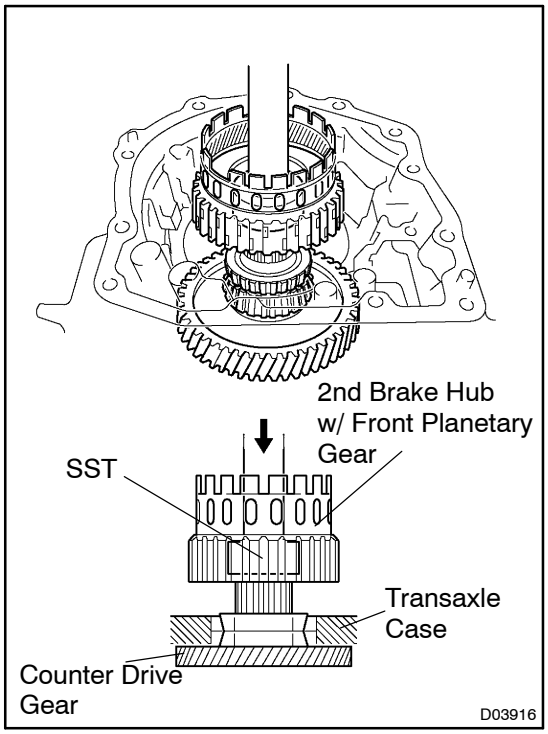

(b) Install the front planetary gear to the brake hub.

(c) Using SST, a press and press–fit the front planetary gear.
SST 09950–60010 (09951–00400)

NOTICE:
Do not apply excessive pressure to it.

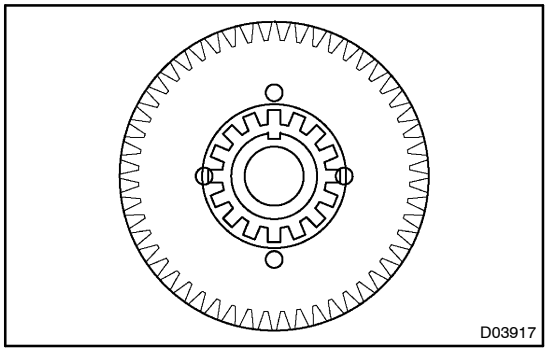

(d) Install the washer, as shown in the illustration.

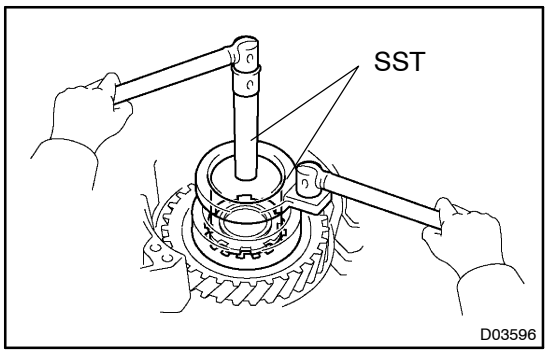

(e) Using SST, install the nut.
SST 09387–00030, 09387–00080
Torque: 280 N·m (2,855 kgf·cm, 207 ft·lbf)

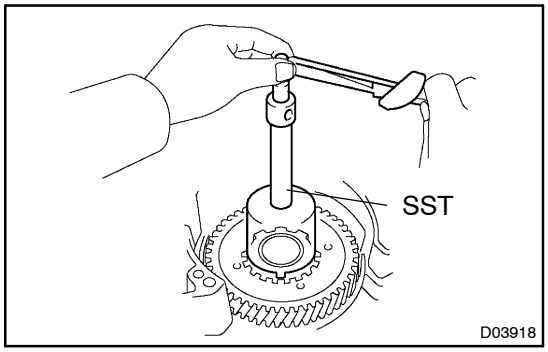

(f) Using SST and a torque wrench, measure the starting torque of the bearing. When the measured value is not within the specified value, gradually tighten the nut until it reaches the specified value.
SST 09387–00080
Starting torque:
0.5 – 1.0 N·m (5.0 – 10.0 kgf·cm, 4.3 – 8.7 in.·lbf)

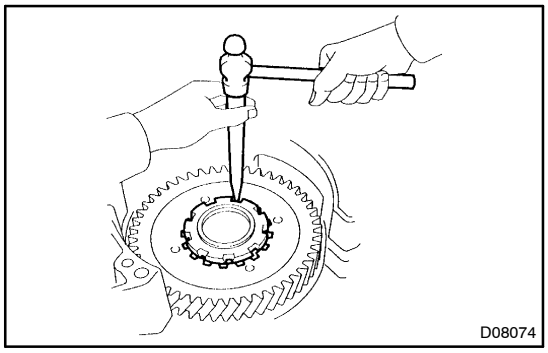

(g) Using a chisel and hammer, stake the lock washer.

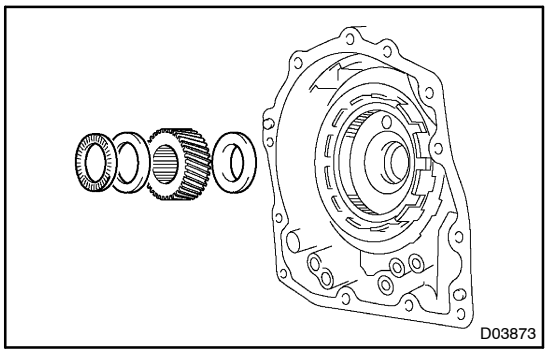

(h) Install the 2 bearings, 2 races and front planetary sun gear to the front planetary gear.

Bearing and race diameter: mm (in.)

	inside	out side
Bearing	34.6 (1.362)	48.5 (1.909)
Race	40.3 (1.587)	58.0 (2.283)
Bearing	38.6 (1.520)	60.0 (2.362)

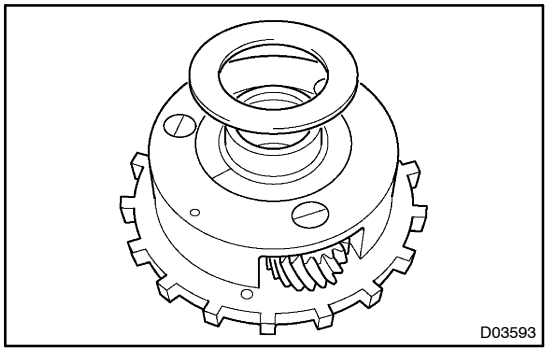

11. INSTALL REAR PLANETARY GEAR

(a) Coat a bearing race with ATF, install it to the rear planetary gear assembly.

Bearing race diameter:

	inside	out side
Race	38.6 (1.520)	58.0 (2.283)

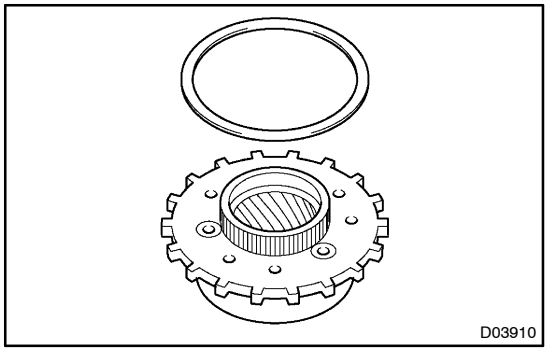

(b) Install the thrust washer No.2.

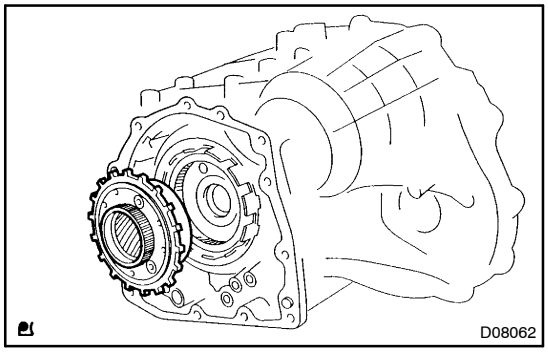

(c) Install the rear planetary gear from the rear planetary ring gear.

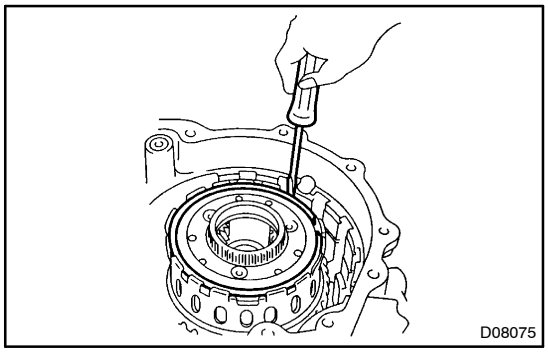

(d) Using a screwdriver, install the snap ring.

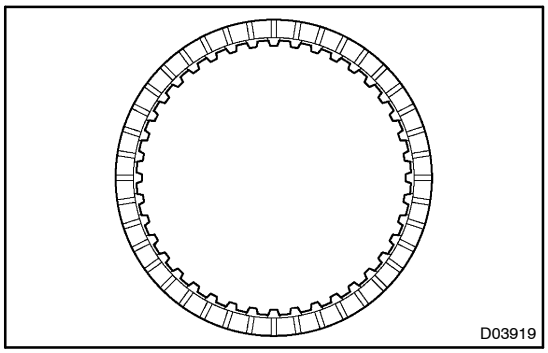

12. INSPECT DISC AND FLANGE OF 1ST & REVERSE BRAKE

Check to see if the sliding surface of the disc, plate and flange are worn or burnt. If necessary, replace them.

HINT:

- If the lining of the disc is peeling off or discolored, or even if a part of the printed mark is defaced, replace all discs.
- Before assembling new discs, soak them in ATF for at least 15 minutes.

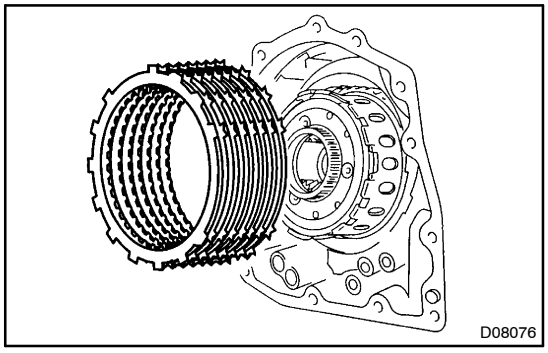

13. INSTALL 1ST & REVERSE BRAKE

(a) Install the 5 plates and 5 discs.

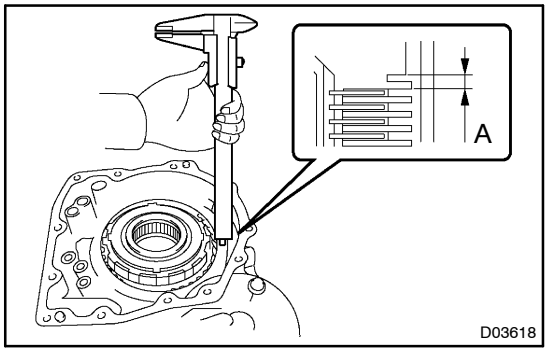

(b) Using vernier calipers, measure the distance between the disc surface and the contact surface of the 2nd brake cylinder and transaxle case.(Dimension A)

(c) Select an appropriate flange so that the piston stroke will meet the specified value.

Piston stroke: 1.10 – 1.24 mm (0.0433 – 0.0488 in.)

HINT:

Piston stroke = Dimension A – Flange thickness

Flange thickness = mm (in.)

Mark	Thickness	Mark	Thickness
1	1.8 (0.071)	5	2.2 (0.087)
2	1.9 (0.075)	6	2.3 (0.091)
3	2.0 (0.079)	7	2.4 (0.094)
4	2.1 (0.083)	8	2.5 (0.098)

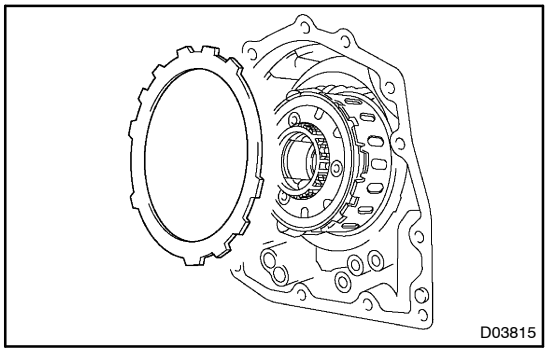

(d) Install the flange.

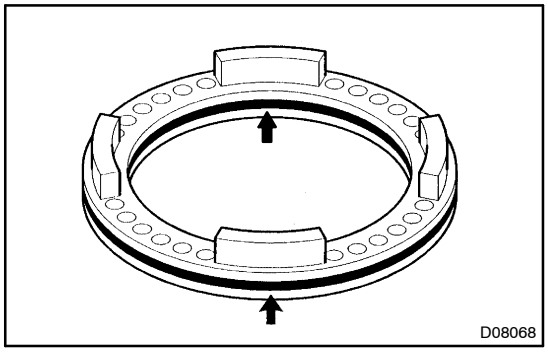

14. INSTALL 2ND BRAKE PISTON

(a) Coat 2 new O–rings with ATF, install them to the 2nd brake piston.

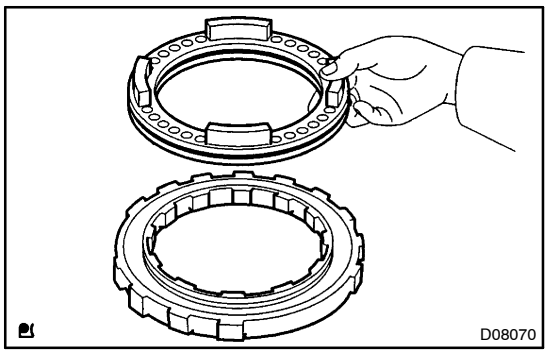

(b) Install the 2nd brake piston to the 2nd brake cylinder.

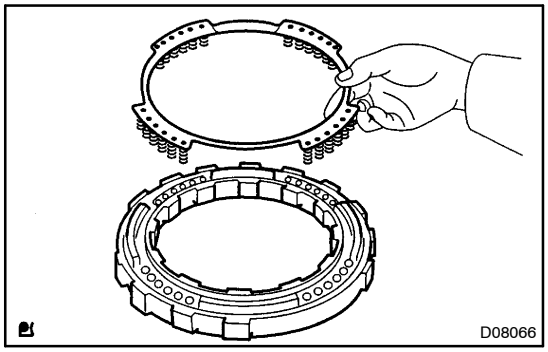

(c) Install the return spring to the 2nd brake piston.

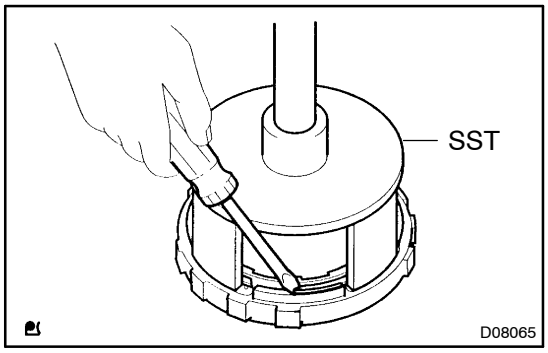

(d) Using SST, a press and a screwdriver, install the snap ring.
SST 09387–00060

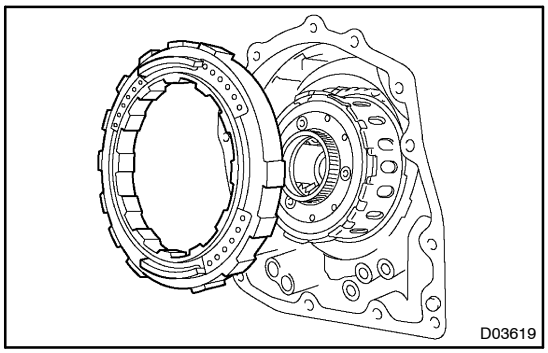

15. INSTALL 2ND BRAKE CYLINDER ASSEMBLY, ONE–WAY CLUTCH NO.1 AND REAR PLANETARY SUN GEAR ASSEMBLY

(a) Install the 2nd brake cylinder assembly to the transaxle case.

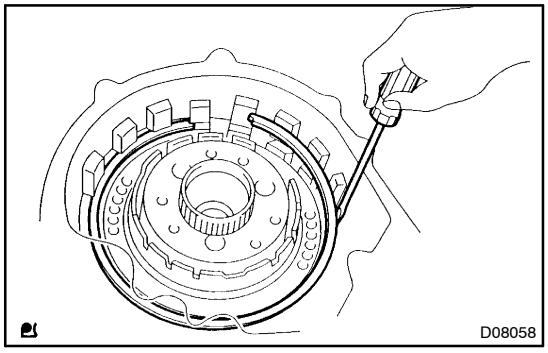

(b) Using a screwdriver, install the snap ring.

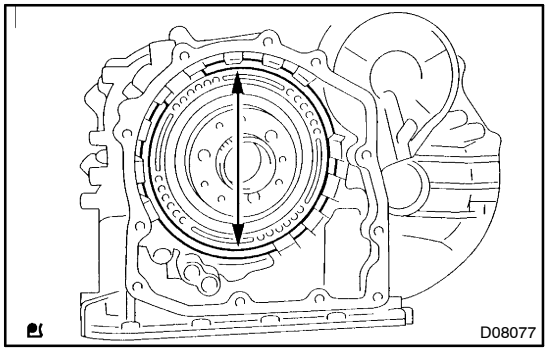

(c) Using vernier calipers, measure the inside diameter.
Inside diameter: More than 167 mm (6.57 in.)

NOTICE:

- **Because the taper snap ring has the positioning direction, check it when installing.**
- **When the diameter does not satisfy the specified value, replace the snap ring with new one.**

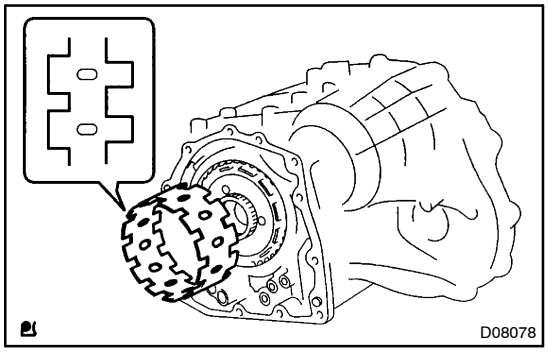

(d) Install the one–way clutch outer race sleeve to the 2nd brake cylinder assembly.

NOTICE:

Check the positioning direction of the outer sleeve.

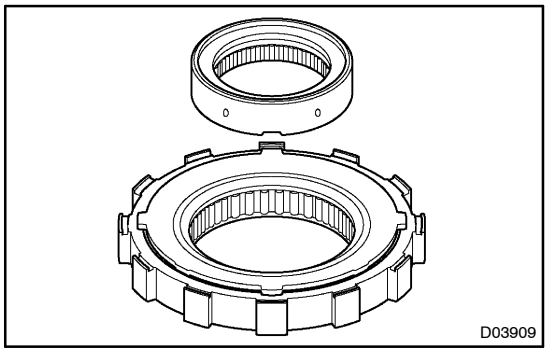

(e) Install the inner race to the one–way clutch.

NOTICE:

Check the direction of the inner race.

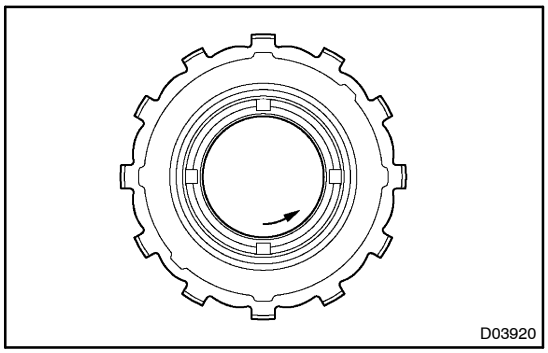

(f) Check the rotating direction of one–way clutch for the lock or free operation as shown in illustration.

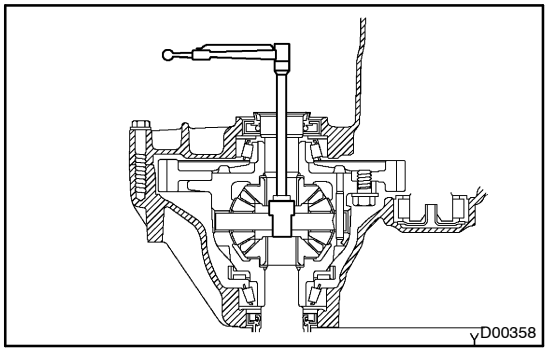

(g) Install the one–way clutch No. 1 and bearing to the one–way clutch outer race sleeve.

Bearing diameter: mm (in.)

	Inside	Outside
Bearing	53.6 (2.110)	69.6 (2.740)

NOTICE:

Install the thrust bearing properly so that the black race will be risible.

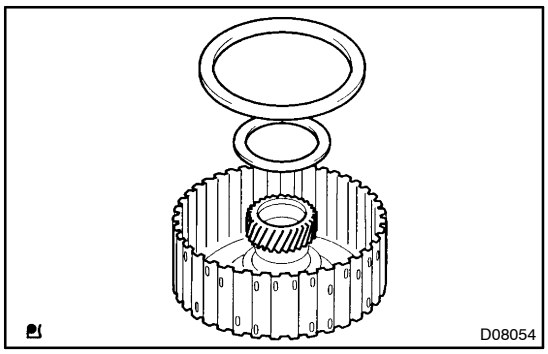

(h) Install the thrust bearing.

(i) Coat the thrust washer No. 1 with petroleum jelly install it onto the rear planetary sun gear.

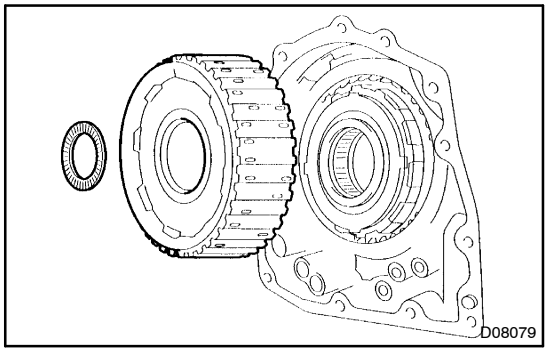

(j) Coat the bearing with petroleum jelly and install it onto the rear planetary sun gear.

Bearing diameter: mm (in.)

	Inside	Outside
Bearing	33.7 (1.327)	48.2 (1.898)

(k) Install the rear planetary sun gear assembly to the rear planetary gear.

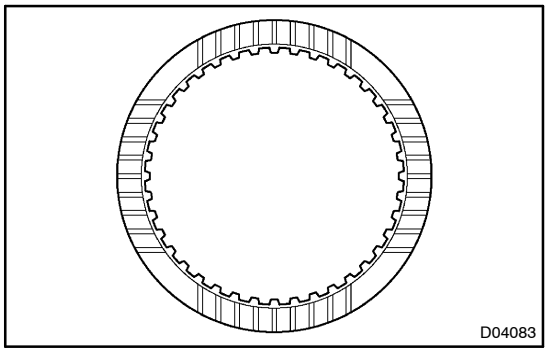

16. INSPECT DISC AND FLANGE OF 2ND BRAKE

Check to see if the sliding surface of the disc, plate and flange are worn or burnt. If necessary, replace them.

HINT:

- If the lining of the disc is peeling off or discolored, or even if a part of the printed mark is defaced, replace all discs.
- Before assembling new discs, soak them in ATF for at least 15 minutes.

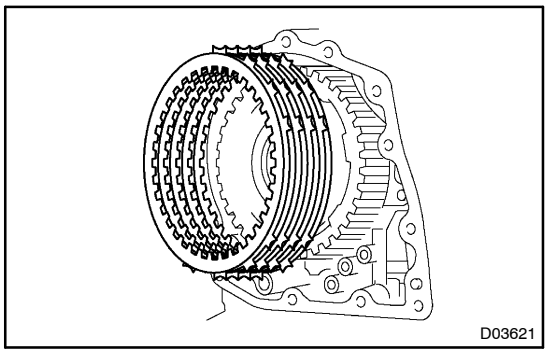

17. INSTALL 2ND BRAKE

(a) Install the 4 discs and 4 plates to the transaxle case.

(b) Temporarily install the snap ring.

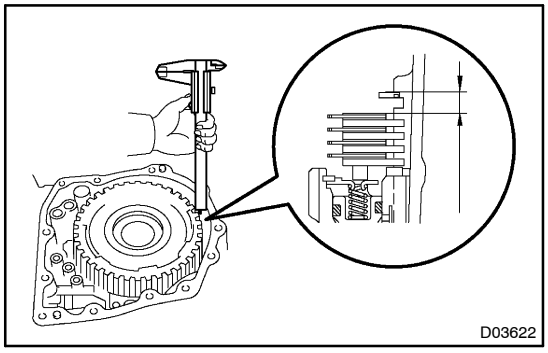

(c) Using vernier calipers, measure the distance between the disk surface and snap ring surface.

(d) Select an appropriate flange so that the piston stroke will meet the specified value.

Piston stroke: 0.62 – 0.73 mm (0.0244 – 0.0287 in.)

HINT:

Piston stroke = Clearance – Flange thickness – Snap ring thickness 1.6 mm (0.063 in.).

Flange thickness: mm (in.)

Mark	Thickness	Mark	Thickness
1	3.0 (0.118)	5	3.4 (0.134)
2	3.1 (0.122)	6	3.5 (0.138)
3	3.2 (0.126)	7	3.6 (0.142)
4	3.3 (0.130)	–	–

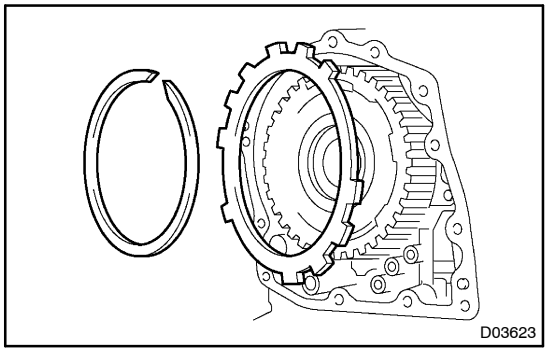

(e) Temporarily remove the snap ring, attach the selected flange and restore the snap ring.

NOTICE:

Secure the snap ring so that its end gap is visible through the groove of the transaxle case.

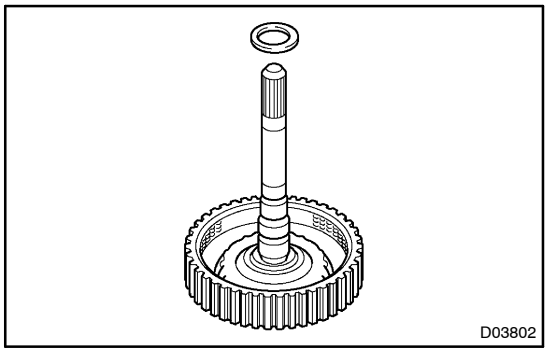

18. INSTALL DIRECT CLUTCH ASSEMBLY

(a) Install the bearing race to the direct clutch.

Bearing race diameter:

	Inside	Outside
Bearing race	30.3 (1.193)	46.0 (1.811)

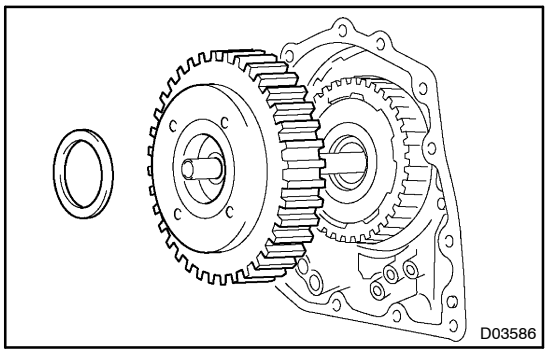

(b) Install direct clutch assembly and thrust bearing to the rear planetary sun gear assembly.

NOTICE:

The disk in the direct clutch should completely mate with the hub attached outside the rear planetary sun gear. Otherwise, the rear cover can not be installed.

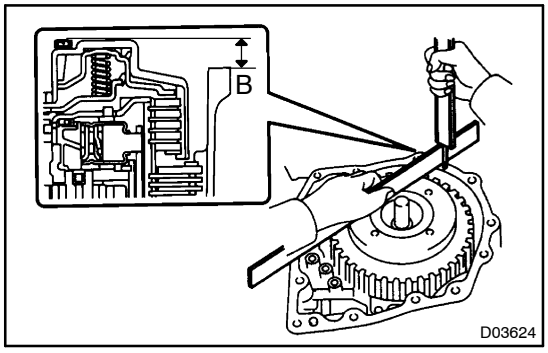

(c) Clean the connected part of the transaxle case and rear cover.

(d) As shown in the illustration, place a straight edge on the direct clutch drum and measure the distance between the transaxle case and the straight edge using vernier calipers (Dimension B).

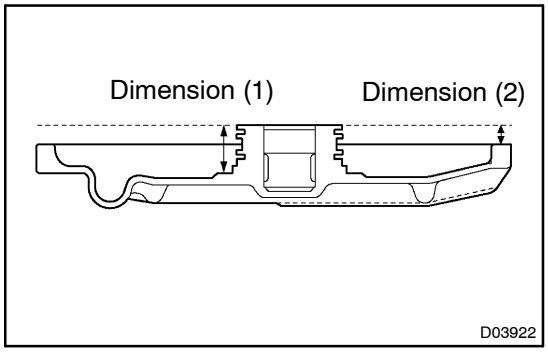

(e) Measure the 2 places of the rear cover as shown in the illustration and calculate a dimension C using the following formula.

HINT:

Dimension C = Dimension (1) – Dimension (2)

(f) Calculate the end play value using the following formula. Select a thrust bearing which satisfies the end play value and install it.

End play: 0.2 – 0.9 mm (0.008 – 0.035 in.)

NOTICE:

Make sure that the black race side is facing the rear cover.

HINT:

End play = Dimension C – Dimension B

Bearing thickness and diameter: mm (in.)

Thickness	Inside	Outside
3.55 (0.1397)	53.6 (2.110)	69.6 (2.740)
3.85 (0.1515)	53.6 (2.110)	70.18 (2.763)

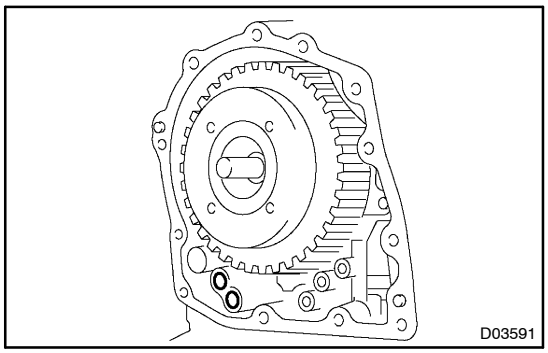

19. INSTALL 2 NEW APPLY GASKETS

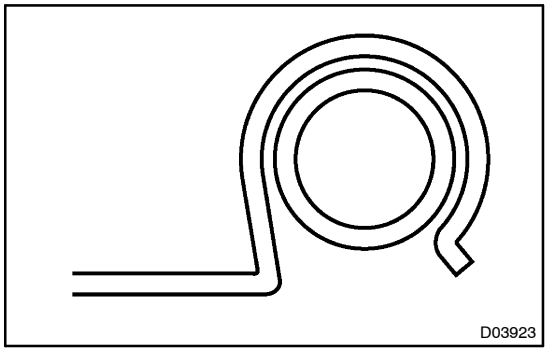

20. INSTALL APPLY TUBE

(a) Install the clamp to the apply pipe.

NOTICE:

Make sure to install the clamp to the apply pipe before installing the apply tube to the transaxle case. This prevents the apply pipe from being deformed or damaged.

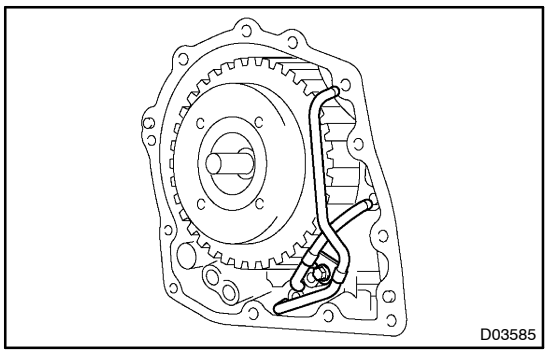

(b) Install the 2 apply pipe and a bolt to the transaxle case.

Torque: 5.4 N·m (55 kgf·cm, 48 in.·lbf)

NOTICE:

Each pipe is securely inserted until it reaches the stopper.

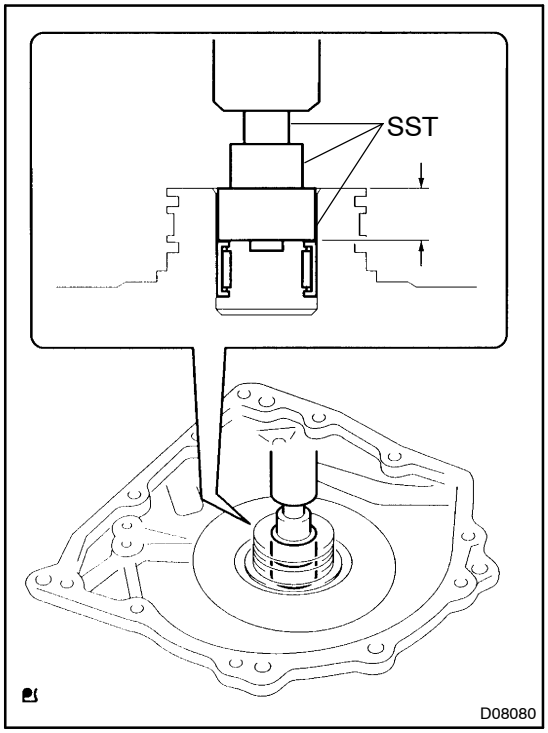

21. DINSTALL TRANSAXLE REAR COVER

(a) Using SST and a press, install the bearing.
SST 09950–60010 (09951–00230, 09951–00350)
Press fit depth: 12.05 – 12.75 mm (0.4744 – 0.5020 in.)

NOTICE:

- **Face the inscribed mark side of the bearing race up.**
- **Repeat the press fit until the specified value is obtained.**

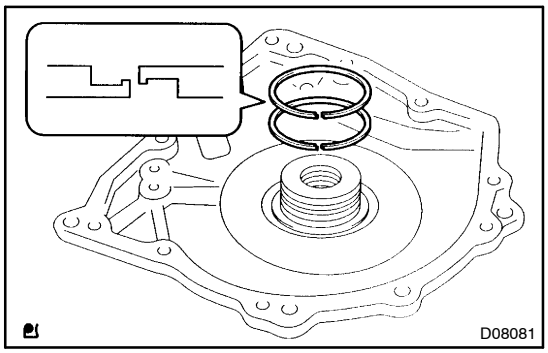

(b) Coat 2 oil seal rings with ATF, install them to the transaxle rear cover.

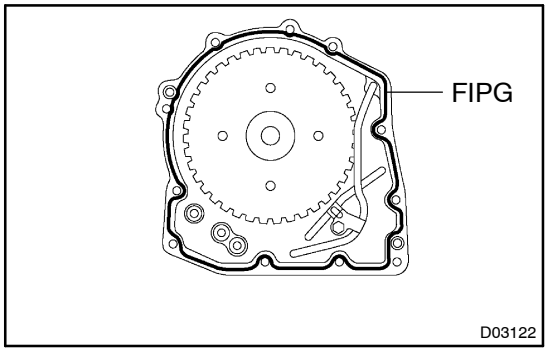

(c) Remove any packing material and be careful not to get oil on the contacting surfaces of the transaxle rear cover or the transaxle case.

(d) Apply FIPG to the rear cover.
FIPG:
Part No. 08826–00090, THREE BOND 1281 or equivalent.

(e) Coat a needle roller bearing with ATF.

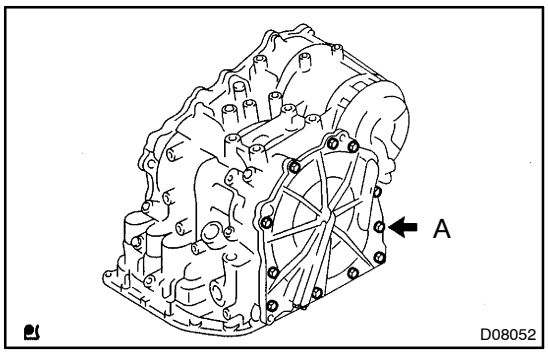

(f) Apply liquid sealer to the ”A” bolt threads.
Sealant:
Part No. 08833–00080, THREE BOND 1344, LOCTITE 242 or equivalent.

(g) Install the 11 bolts.
Torque:
A bolt: 18.6 N·m (190 kgf·cm, 14 ft·lbf)
Other bolt: 24.5 N·m (250 kgf·cm, 18 ft·lbf)

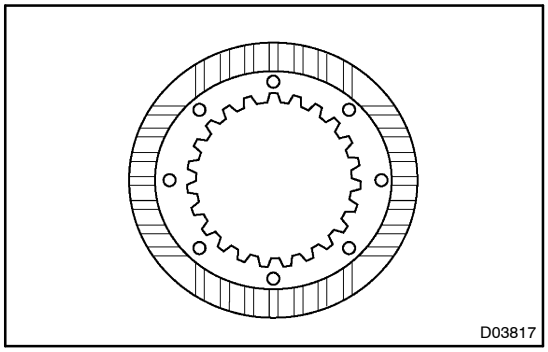

22. INSPECT DISC AND FLANGE OF U/D BRAKE

Check to see if the sliding surface of the disc, plate and flange are worn or burnt. if necessary, replace them.

HINT:

- If the lining of the disc is peeling off or discolored, or even if a part of the printed mark is defaced, replace all discs.
- Before assembling new discs, soak them in ATF for at least 15 minutes.

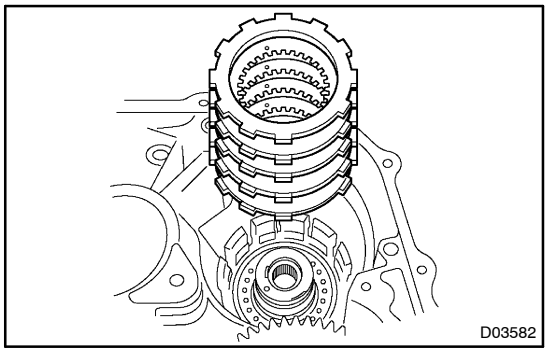

23. INSTALL U/D BRAKE

(a) Install the 3 discs and 3 plates to the transaxle case.

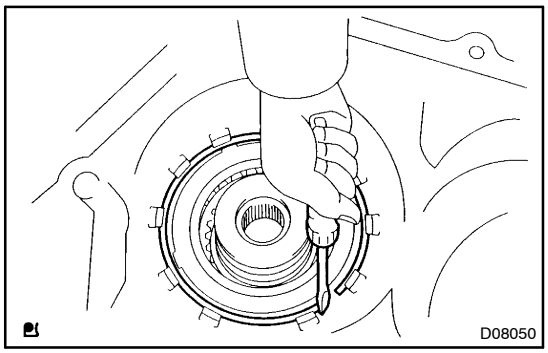

(b) Using a screwdriver, install the snap ring.

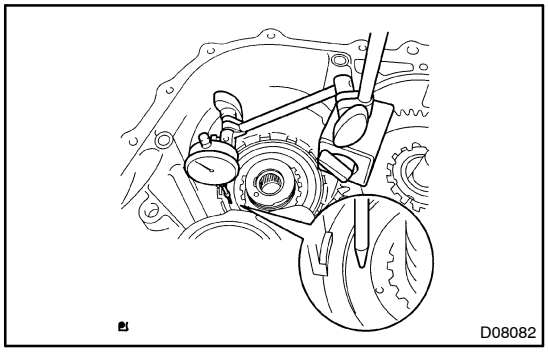

(c) Using a dial indicator, measure the U/D brake piston stroke while applying and releasing compressed air (392 kPa, 4.0 kgf/cm^2, 57 psi).

Piston stroke: 1.87 – 2.08 mm (0.0736 – 0.0819 in.)

HINT:

Select an appropriate flange from the table below so that it will meet the specified value.

Flange thickness: mm (in.)

Mark	Thickness	Mark	Thickness
1	3.0 (0.118)	3	3.4 (0.134)
2	3.2 (0.126)	–	–

(d) Temporarily remove the snap ring and attach the flange. Restore the snap ring.

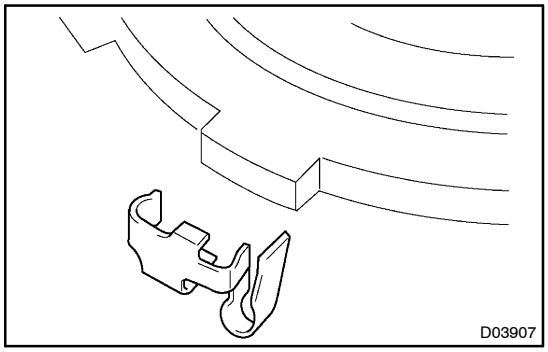

24. INSTALL ONE–WAY CLUTCH NO.2

(a) Install the outer race retainer to the one–way clutch No.2.

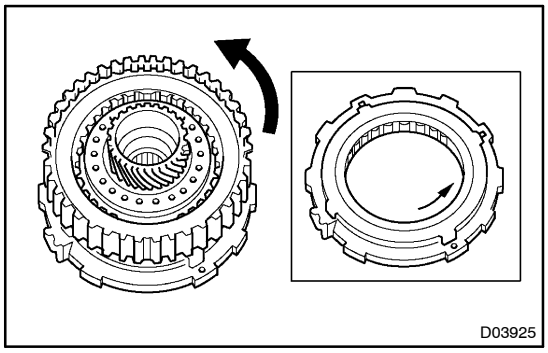

(b) Install the U/D clutch assembly to the one–way clutch. Rotate the U/D clutch assembly to check the rotating direction for the lock or free operation.

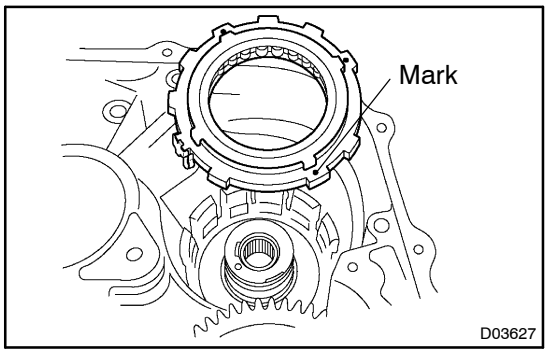

25. INSTALL ONE–WAY CLUTCH NO.2

(a) Install the one–way clutch No.2 to the transaxle case.

NOTICE:

Make sure that the mark on the one–way clutch outer race is visible.

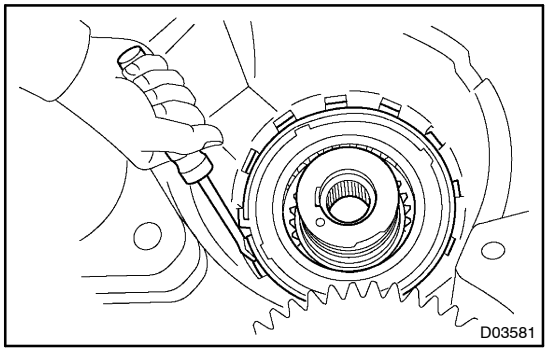

(b) Using screwdriver, install the snap ring to the transaxle case.

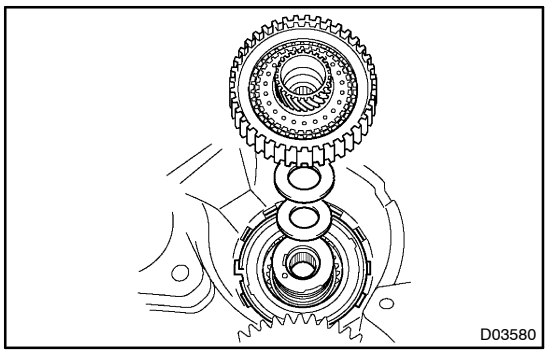

26. INSTALL U/D CLUTCH ASSEMBLY

(a) Coat the bearing and bearing race with petroleum jelly and install it onto the U/D clutch.

Race diameter: mm (in.)

	Inside	Outside
Bearing	37.73 (1.4854)	58.0 (2.283)
Race	29.9 (1.177)	55.5 (2.185)

(b) Install the U/D clutch assembly to the transaxle case.

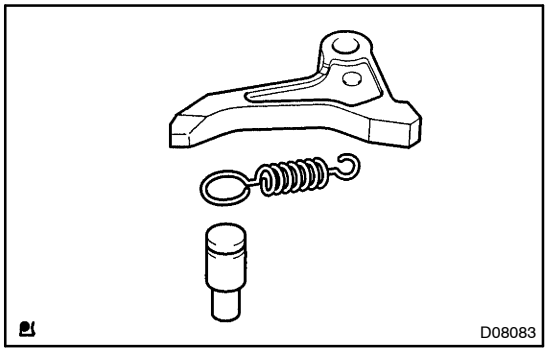

27. INSTALL U/D PLANETARY GEAR ASSEMBLY AND DIFFERENTIAL ASSEMBLY

(a) Install the pawl pin and spring to the parking lock pawl.

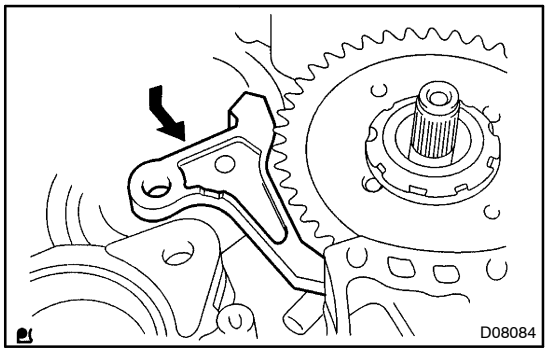

(b) Temporarily install the parking lock pawl, shaft and spring to the transaxle case as shown in the illustration.

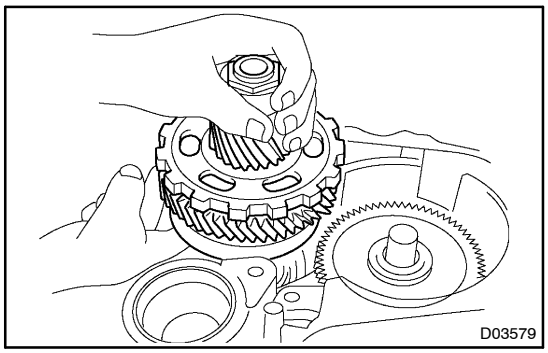

(c) Install the U/D planetary gear assembly to the transaxle case.

NOTICE:

Engage all the discs of U/D clutch and hub spline of the U/D planetary gear assembly firmly and assemble them securely.

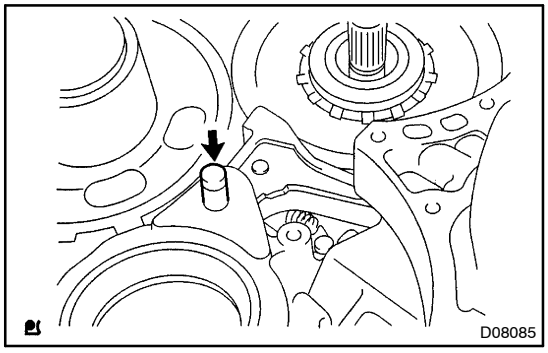

(d) Install the parking lock pawl shaft.

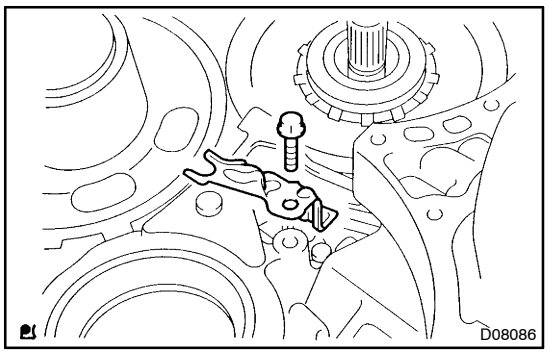

(e) Install the pawl shaft with the bolt.
Torque: 9.8 N·m (100 kgf·cm, 7 ft·lbf)

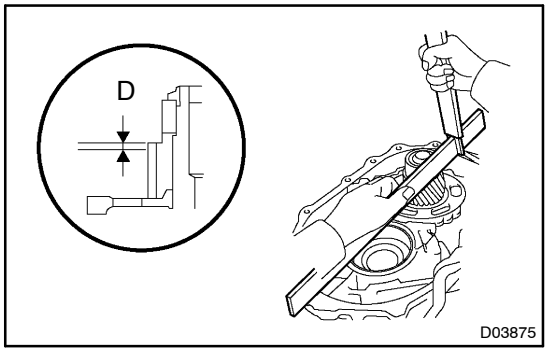

(f) Using a straight edge and vernier calipers as shown in the illustration, measure the gap between the top of the differential drive pinion in the U/D planetary gear and contact surface of the transaxle case and housing. (Dimension D)

NOTICE:

Note down the dimension D as it is necessary for the following process.

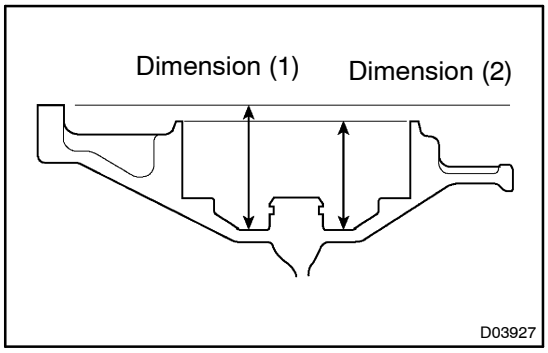

(g) As shown in the illustration, measure the 2 places of the transaxle housing. Calculate the dimension E using the formula.

NOTICE:

Note down the dimension E as it is necessary for the following process.

HINT:

Dimension E = Dimension (1) – Dimension (2)

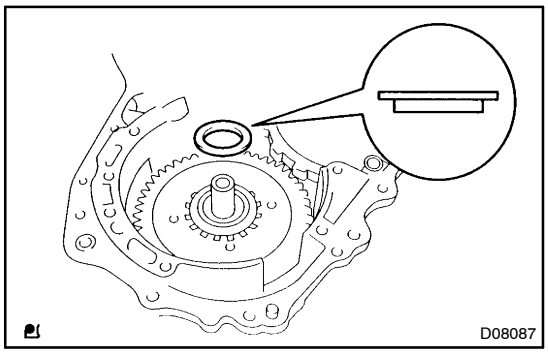

28. INSTALL MULTIPLE DISC CLUTCH HUB

(a) Install the bearing race to the transaxle while checking its direction.

Bearing race diameter: mm (in.)

	Inside	Outside
Bearing race	34.5 (1.358)	48.5 (1.909)

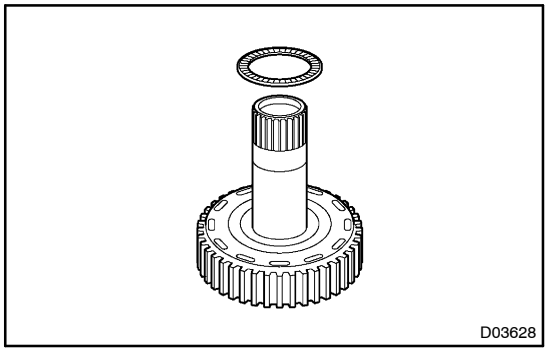

(b) Coat the thrust bearing and race with petroleum jelly and install them onto the multiple disc clutch hub.

Thrust bearing and race diameter: mm (in.)

	Inside	Outside
Bearing	36.3 (1.429)	52.2 (2.055)

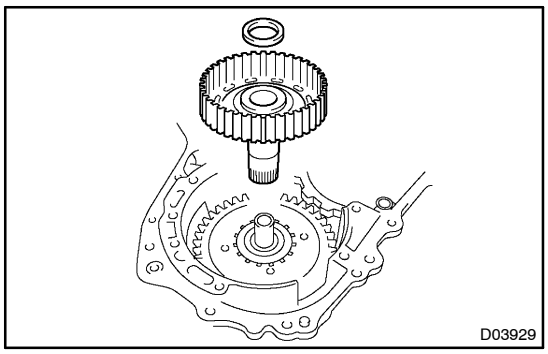

(c) Install the bearing to the multiple clutch hub.

Bearing diameter: mm (in.)

	Inside	Outside
Bearing	23.5 (0.925)	44.0 (1.732)

(d) Install the forward clutch hub to the transaxle case.

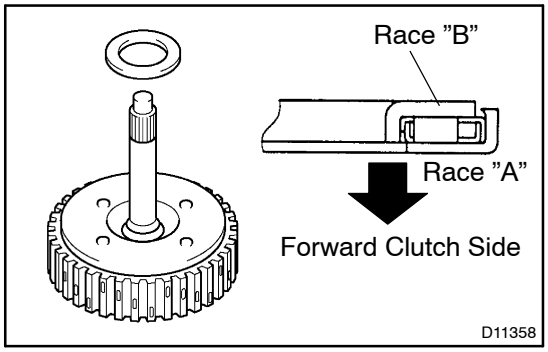

(e) Install the thrust bearing to the forward clutch.

Bearing diameter: mm (in.)

	Inside	Outside
Bearing	33.85 (1.3327)	52.2 (2.055)

NOTICE:

Install the thrust bearing properly so that the race ”B” will be visible.

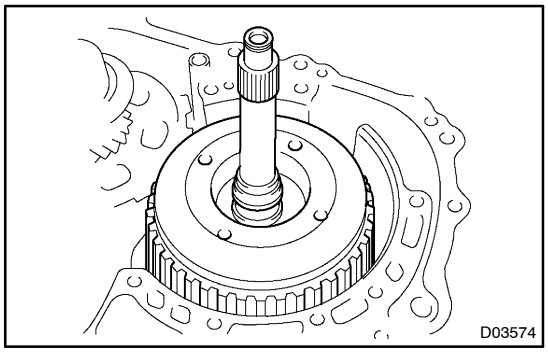

(f) Install the forward clutch to the multiple clutch hub.

NOTICE:

Align the splines of all discs in the forward clutch with those of multiple clutch hub to assemble them securely.

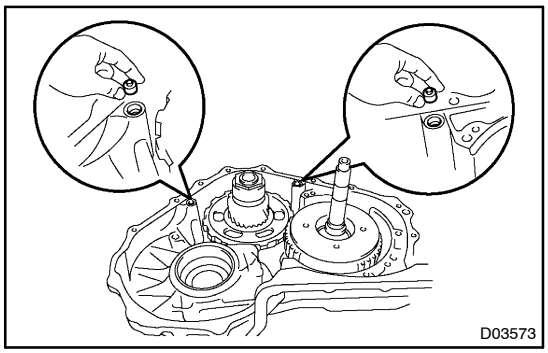

29. INSTALL 2 NEW APPLY GASKET

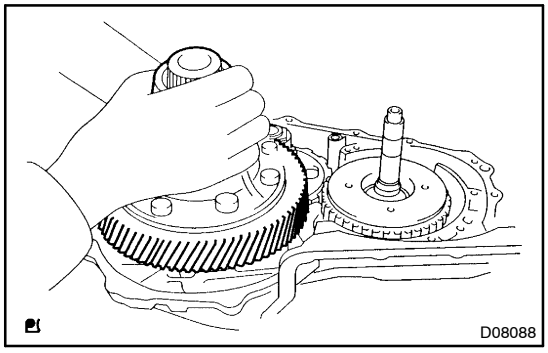

30. INSTALL DIFFERENTIAL ASSEMBLY

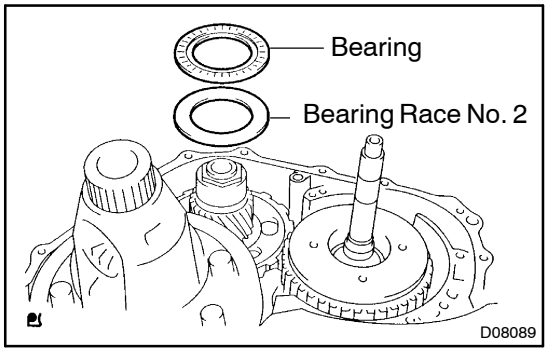

31. INSTALL TRANSAXLE HOUSING

(a) Calculate the end play value using the following formula and values of Dimension D and E that were measured when installing cylindrical roller bearing and U/D planetary gear. Select an appropriate U/D planetary gear thrust bearing race No.2 which satisfies the specified end play value, and install it.

End play: 0.198 – 0.693 mm (0.0078 – 0.0273 in.)

HINT:

End play = Dimension E – Dimension D – Thrust bearing thickness 3.28 mm (0.1291 in.) – U/D gear thrust bearing race No.2 thickness

Race thickness: mm (in.)

E – D	Thickness
Less than 7.42 (0.2921)	3.5 (0.138)
7.42 (0.2921) or more	3.8 (0.150)

Bearing and bearing race diameter: mm (in.)

	Inside	Outside
Bearing	57.2 (2.252)	84.96 (3.3449)
Bearing race	56.4 (2.220)	83.0 (3.268)

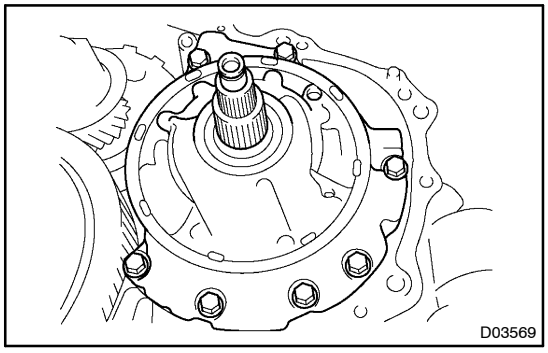

(b) Install the oil pump and 7 bolts to the transaxle case

Torque: 22 N·m (226 kgf·cm, 16 ft·lbf)

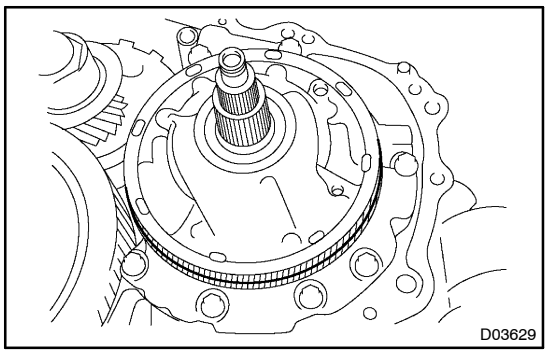

(c) Coat on O–ring of oil pump with ATF.

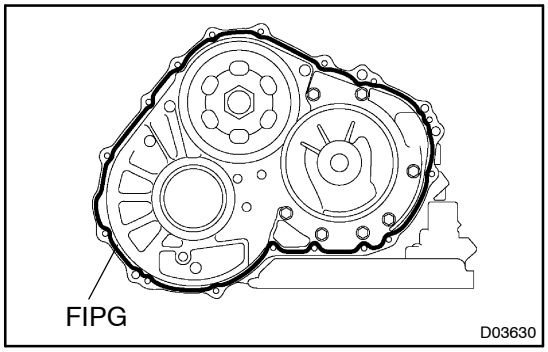

(d) Remove any packing material and be careful not to get oil on the contacting surfaces of the transaxle case or transaxle housing.

(e) Apply FIPG to the transaxle case.
FIPG:
Part No. 08826–00090, THREE BOND 1281 or equivalent

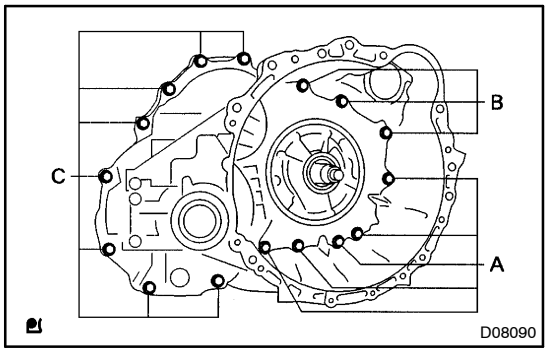

(f) Install the transaxle housing and 16 bolts to the transaxle case.
Torque:
Bolt A: 22 N·m (226 kgf·cm, 16 ft·lbf)
Bolt B and C: 29 N·m (300 kgf·cm, 22 ft·lbf)

HINT:
Apply seal packing or equivalent to the bolt A.
Seal packing:
THREE BOND 2403 or equivalent
Bolt length:
Bolt A: 50 mm (1.969 in.)
Bolt B: 50 mm (1.969 in.)
Bolt C: 42 mm (1.654 in.)

NOTICE:
Because the bolt A is a seal bolt, apply the seal packing to new bolts and tighten them within 10 minutes after application.

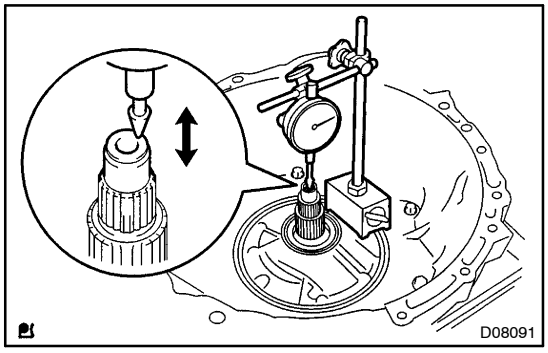

32. INSPECT INPUT SHAFT END PLAY
Using a dial indicator, measure the input shaft end play.
End play: 0.27 – 1.24 mm (0.0106 – 0.0417 in.)

33. CHECK DIFFERENTIAL PRELOAD
(See page AX–107)

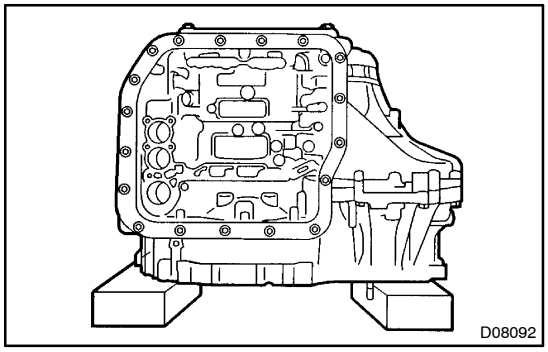

34. PLACE TRANSAXLE HOUSING

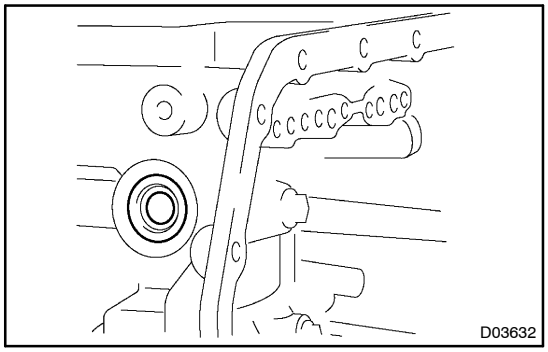

35. INSTALL MANUAL VALVE LEVER SHAFT

(a) Coat the new oil seal with ATF.

(b) Install the oil seal to the transaxle case.

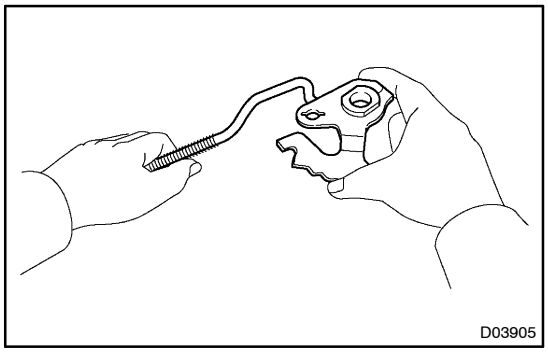

(c) Install the parking lock rod to the manual valve lever.

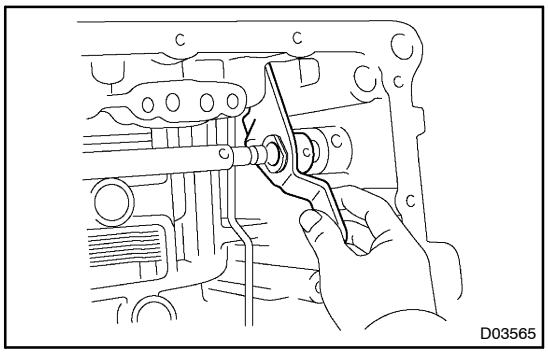

(d) Install a new spacer and manual valve lever shaft to the transaxle case.

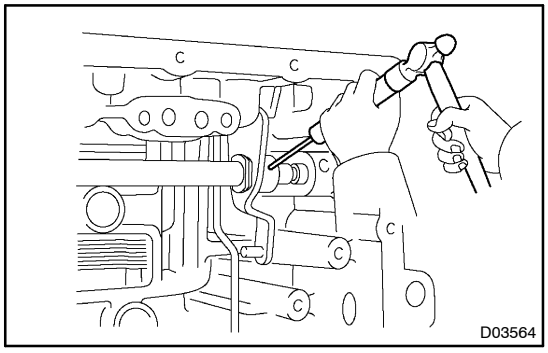

(e) Using a pin punch and a hammer, drive in a new pin.

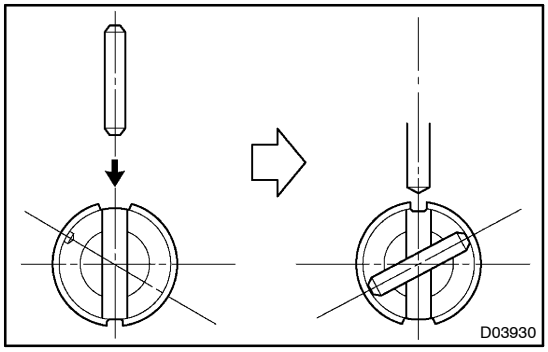

(f) Turn the spacer and the lever shaft to alight the small hole for locating the staking position in the spacer with the staking position mark on the lever shaft.

(g) Using a pin punch, stake the spacer through the small hole.

(h) Check that the spacer does not turn.

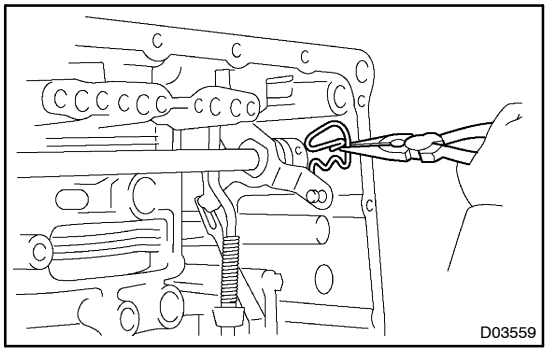

(i) Using needle–nose pliers, install the return spring.

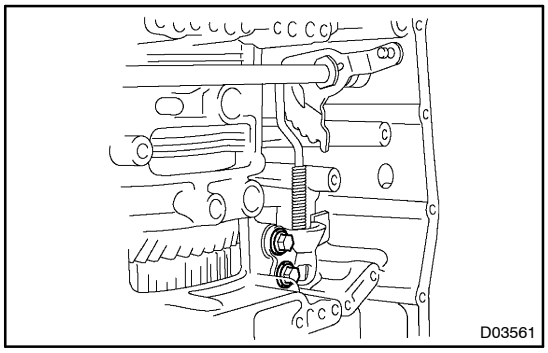

(j) Install the parking lock pawl bracket with 2 bolts.
Torque: 20 N·m (205 kgf·cm, 15 ft·lbf)
Bolt length: 25 mm (0.984 in.)

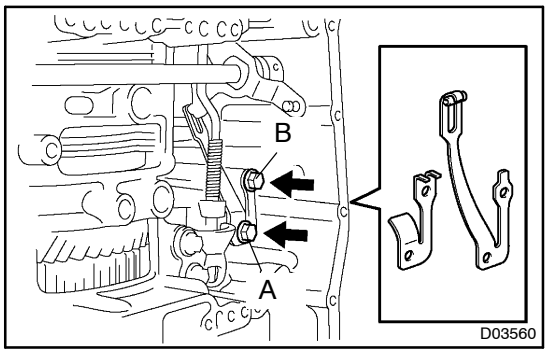

(k) Install the manual detent spring with 2 bolts.

NOTICE:

Make sure to install the manual detent spring and cover in this order.

Torque:
Bolt A: 20 N·m (205 kgf·cm, 15 ft·lbf)
Bolt B: 12 N·m (120 kgf·cm, 9 ft·lbf)
Bolt length:
Bolt A: 27 mm (1.063 in.)
Bolt B: 16 mm (0.630 in.)

36. INSTALL ACCUMULATOR PISTONS AND SPRINGS

(a) Coat new 4 O–rings with ATF and install them to the pistons.

(b) Coat the 4 springs and 3 accumulator pistons with ATF, install them to the holes.

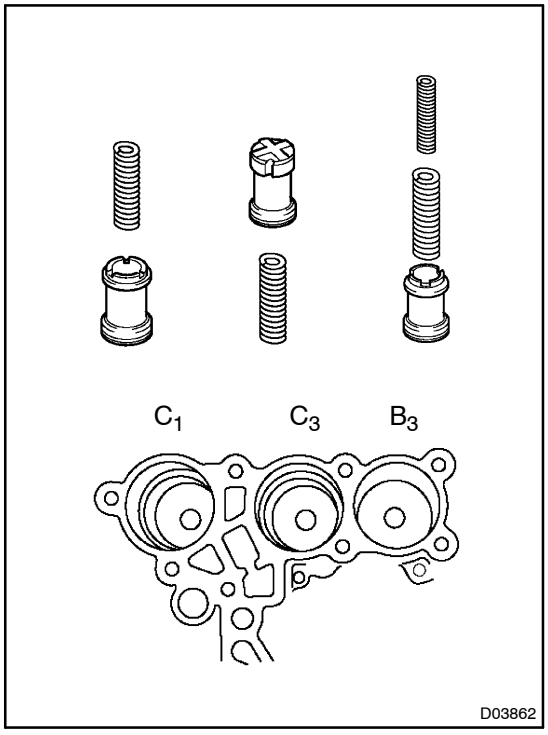

Accumulator spring:

Spring		Free length Outer diameter mm (in.)	Color
B_3	Inner	60.24 (2.3716) / 15.9 (0.626)	Green
	Outer	72.61 (2.8587) / 16.7 (0.657)	Blue
C_3		86.66 (3.4118) / 19.2 (0.756)	Yellow
C_1		90.53 (3.5642) / 18.5 (0.728)	Red

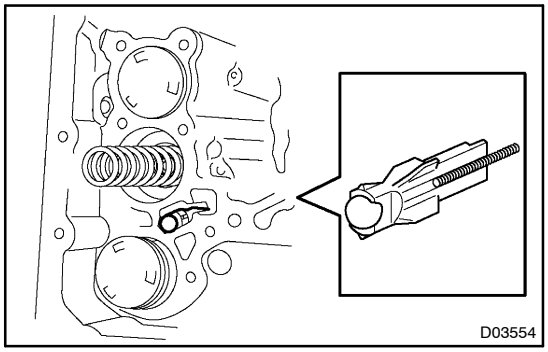

37. INSTALL CHECK BALL BODY AND SPRING

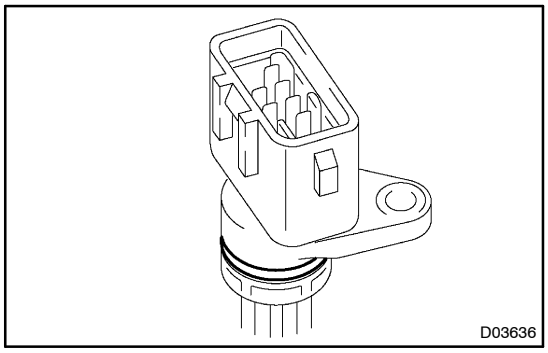

38. INSTALL TRANSAXLE SOLENOID WIRE

(a) Coat a new O–ring with ATF, install it to the transaxle solenoid wire.

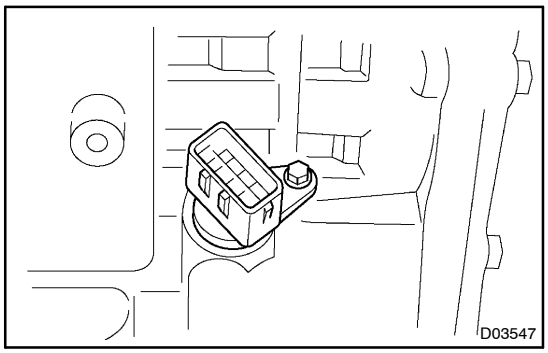

(b) Install the solenoid wire retaining bolt
Torque: 5.4 N·m (55 kgf·cm, 48 in.·lbf)

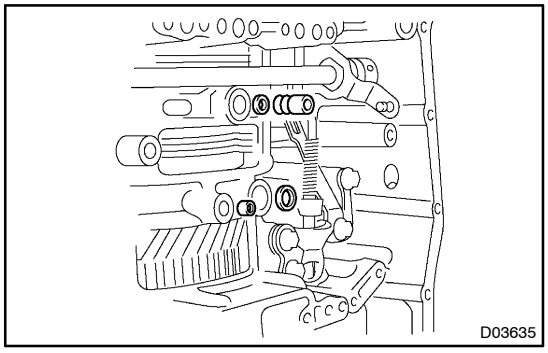

39. INSTALL APPLY GASKET

(a) Coat 4 apply gaskets with ATF and install them to the transaxle case.

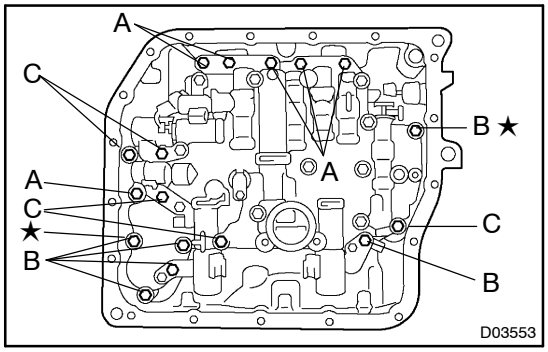

40. INSTALL VALVE BODY ASSEMBLY

(a) Align the groove of the manual valve with the pin of lever.

(b) Install the 17 bolts.
Torque: 11 N·m (110 kgf·cm, 8 ft·lbf)

NOTICE:

- **Push the valve body against the accumulator piston spring and the check ball body to install it.**
- **Tighten those bolts marked by ★ in the illustration first temporarily because they are positioning bolts.**

HINT:
Each bolt length is indicated below.
Bolt length:
Bolt A: 25 mm (0.984 in.)
Bolt B: 41 mm (1.614 in.)
Bolt C: 45 mm (1.771 in.)

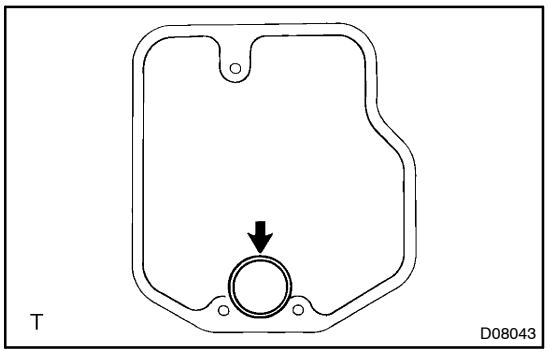

41. INSTALL OIL STRAINER

(a) Coat new gasket with ATF, install it to the oil strainer.

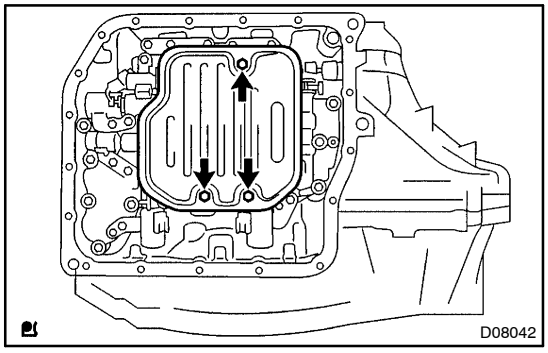

(b) Install the oil strainer and 3 bolts to the valve body.
Torque: 11 N·m (110 kgf·cm, 8 ft·lbf)

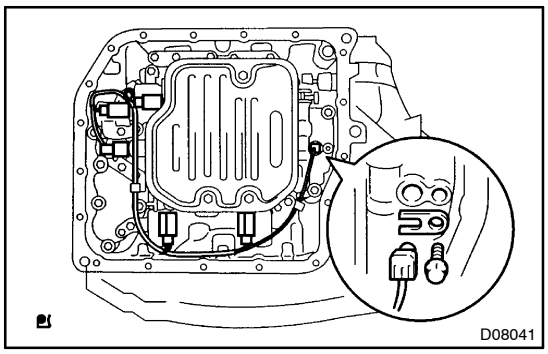

(c) Connect the 5 solenoid connectors.

(d) Install the ATF temperature sensor, lock plate and bolt.
Torque: 6.6 N·m (67 kgf·cm, 58 in.·lbf)

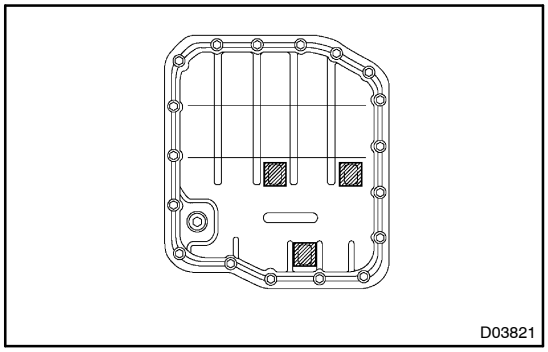

42. INSTALL OIL PAN

(a) Install the 3 magnets in the oil pan.

(b) Apply seal packing or equivalent to the new 18 bolts.
Seal packing:
THREE BOND 2430 or equivalent

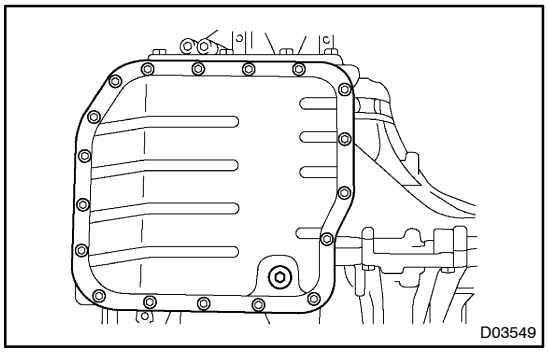

(c) Install a new gasket, oil pan and 18 bolts to the transaxle case.
Torque: 7.8 N·m (80 kgf·cm, 69 in.·lbf)

NOTICE:
Because the bolts should be seal bolts, apply seal packing to new bolts and tighten them within 10 minutes after application.

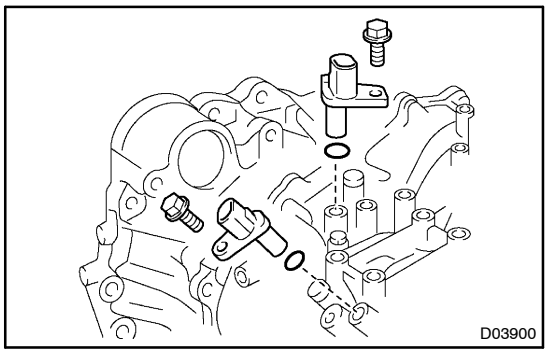

43. INSTALL SPEED SENSOR

(a) Coat new 2 O–rings with ATF, install it to the 2 sensors.

(b) Install the 2 sensors with 2 bolts to the transaxle case.
Torque: 11 N·m (110 kgf·cm, 8 in.·lbf)

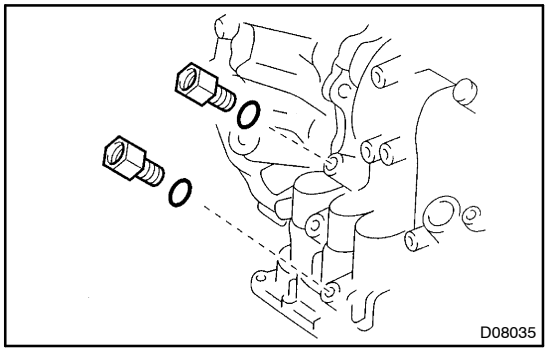

44. INSTALL UNION

(a) Coat new 2 O–rings with ATF, install them to the 2 unions.

(b) Install the 2 unions to the transaxle case.
Torque: 27 N·m (276 kgf·cm, 20 ft·lbf)

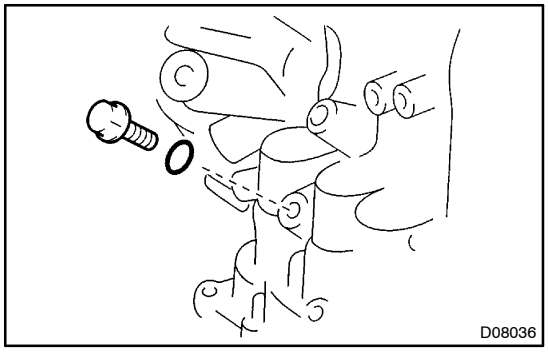

45. INSTALL TRANSAXLE CASE PLUG NO.1

(a) Coat a new O–ring with ATF, install it to the transaxle case plug No.1.

(b) Install the transaxle case plug No.1 to the transaxle case.
Torque: 7.4 N·m (75 kgf·cm, 65 in.·lbf)

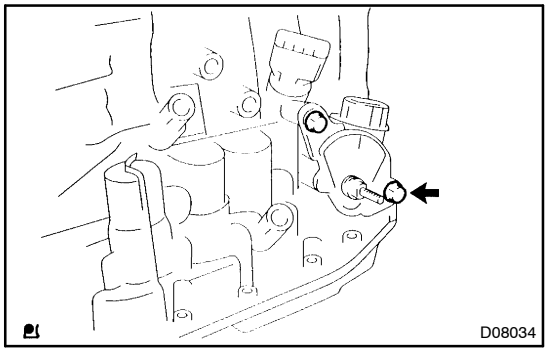

46. INSTALL PARK/NEUTRAL POSITION SWITCH

(a) Install the park/neutral position switch onto the manual valve lever shaft and temporarily install the 2 adjusting bolts.

(b) Install the new nut stopper and nut.
Torque: 6.9 N·m (70 kgf·cm, 61 in.·lbf)

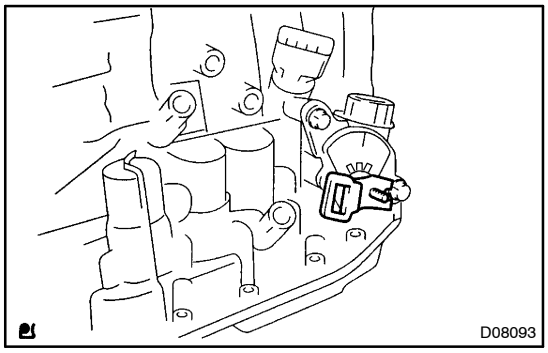

(c) Temporarily install control shaft lever.

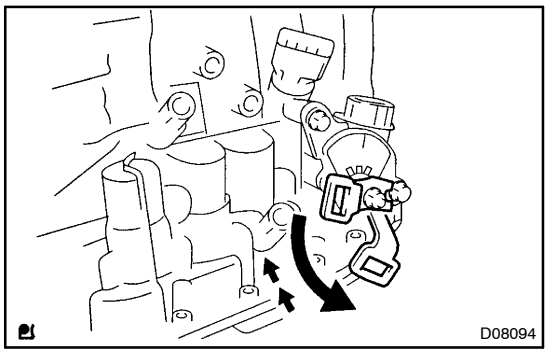

(d) Turn the lever counterclockwise until it stops, them turn it clockwise 2 notches.

(e) Remove the control shaft lever.

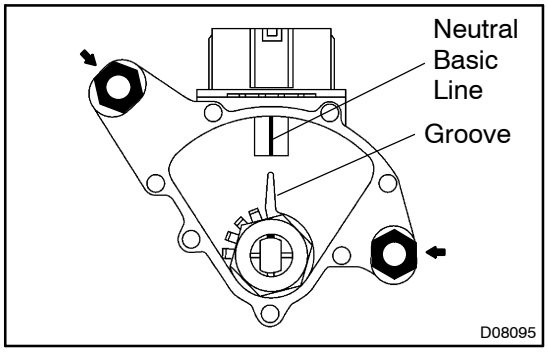

(f) Align the groove with neutral basic line.

(g) Tighten the 2 bolts.
Torque: 5.4 N·m (55 kgf·cm, 48 in.·lbf)

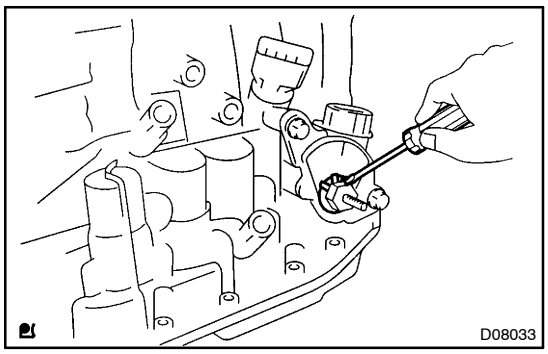

(h) Using a screwdriver, stake the nut with the nut stopper.

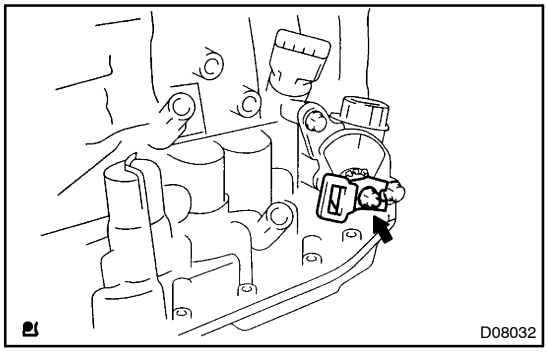

(i) Install control shaft lever, washer and nut.
Torque: 6.9 N·m (70 kgf·cm,61 in.·lbf)